SALTWATER AURORA

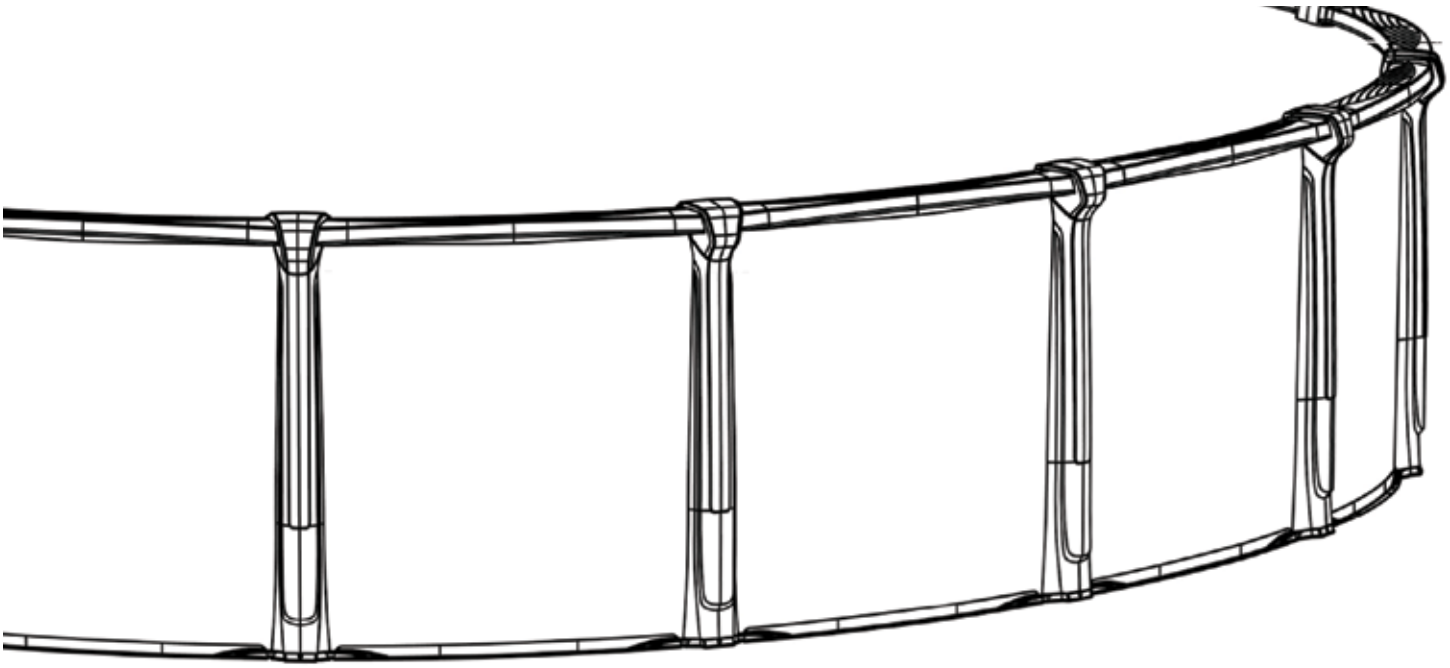

ABOVE GROUND POOL
OVAL INSTALLATION MANUAL

V35079-SWAUR

11.2021

ABOVE GROUND POOL SAFETY
PLEASE READ BEFORE INSTALLATION

WARNING

FAILURE TO HEED THESE WARNINGS CAN RESULT IN PERMANENT INJURY, PARALYSIS FROM A BROKEN NECK, ELECTROCUTION OR DROWNING. THIS POOL IS NOT DESIGNED FOR DIVING OR JUMPING! DANGEROUS INJURY CAN RESULT. SHALLOW WATER!

Carefully read, understand and follow all information in this user manual before installing and using the swimming pool. These warnings, instructions and safety guidelines address some common risks of water recreation, but they cannot cover all risks and dangers in all cases. Always use caution, common sense and good judgment when enjoying any water activity. RETAIN THIS INFORMATION FOR FUTURE USE.

Your pool contains a large quantity of water, and is deep enough to present inherent dangers to life and health unless the following safety rules are strictly observed. First-time users run the highest risk of injury. Make sure everyone understands and encourage all users especially children to learn how to swim. Learn Basic Life Support (Cardiopulmonary Resuscitation-CPR) and refresh this knowledge regularly. Instruct all pool users, including children, what to do in case of an emergency. Keep a working phone and a list of emergency phone numbers near the pool. This can make a life-saving difference in the event of an emergency. To ensure your pool is used safely you **MUST** observe the following safety precautions:

1. NO JUMPING OR DIVING
The top rail of your pool is not a walkway and must not be used for jumping or diving. Do not permit jumping or diving into the pool from a deck or the top rail of the pool. Diving or jumping into the pool can result in serious injury.

2. NEVER USE THE POOL ALONE
Never permit the pool to be used unless it is attended by at least one person other than the bather. Someone should always be available to lend assistance in an emergency. Designate a competent adult to supervise the pool each time it is being used. Vigilant supervision of weak swimmers and non-swimmers by a competent adult is required at all times, remembering that children under five are at the highest risk of drowning.

3. NEVER LEAVE CHILDREN UNATTENDED
Never leave a child alone and unsupervised in or near the pool—not even for a second. There is no substitute for constant adult supervision.

4. NO ROUGH PLAY
Do not permit “roughhousing” in and around your pool. Surfaces can become slippery and hazardous when wet.

5. LIGHT THE POOL AT NIGHT
If the pool is used after dusk, adequate lighting must be provided. Illumination in the pool area must be sufficient to clearly judge pool depth and all features in and around the pool. For lighting recommendations, consult your local licensed electrical contractor

6. RESTRICT ACCESS TO THE POOL
Do not leave chairs or other furniture beside the pool that could be used by a child to climb up into the pool. Ladders must be removed whenever the pool is unattended. A fence with a lockable gate around the pool or yard is strongly recommended and may be required by law in some jurisdictions. Secure doors and windows, where applicable to prevent unauthorized access to the swimming pool. Remove all toys from the swimming pool and surrounding area when not in use to avoid attracting children to the pool. Barriers, pool covers, pool alarms or similar safety devices are helpful aids, but they are not substitutes for continuous adult supervision.

7. NO ALCOHOL OR DRUGS
Never drink alcoholic beverages, use any intoxicants or medication which could hinder your judgment and reflexes.

8. KEEP YOUR POOL CLEAN AND SANITARY
Your filter system will remove suspended particles from the water and the surface skimmer will remove insects, leaves and other debris from the water surface. Use the correct pool chemicals as directed to destroy harmful bacteria and prevent formation of algae. Remember, unsanitary water is a serious health hazard.

9. KEEP OFF TOP LEDGES
Do not walk on top ledges. They can be slippery and they are not a walkway.

10. POOL COVER SAFETY
The cover must have a tamperproof locking retainer cable that positions the cover around the pool wall and keeps it securely in place. Never allow anyone, especially small children on the cover. Asphyxiation or drowning could result. Be sure to remove pool cover completely from the water surface before entering the pool. When purchasing any pool cover, please consult a swimming pool professional.

11. ELECTRICAL HAZARD
Never touch or attempt to service electrical equipment, including the filter when your body and/or the ground is wet. Electrocution or permanent injury due to high voltage (120V AC) could result. The pool should be bonded in accordance with Section 680-26 of the National Electical Code. For further assistance contact your dealer or a local licensed electrician. Do not use pool during electrical or rain storms.

12. SAFETY EQUIPMENT
Keep a safety rope 1/4" by 50" with a flotation buoy with an outside diamter of 15". Have accessible in a prominent area by your pool. Keep a pole not less that 16 feet (4,88m) long with a blunt or hook end available at poolside in case of emergencies. Weak swimmers and non-swimmers should wear personal protection equipment when using the pool.

13. POOL CHEMICALS
Store pool chemicals out of the reach of children. Do not place chlorine, chlorine tablets or sticks directly into skimmer, or winterize your pool with liquid chlorine. Damage to the skimmer, pool liner and filter will result. Failure to obey this instruction will void all component warranties. Always follow chemical manufacturer’s instructions when storing, handling and dispensing pool chemicals.

14. CHECK FOR DAMAGE
Periodically check your pool and ladder components for damage and wear. Be sure all screws are in place. Replace all damaged or worn components and tighten all screws before you use the pool, deck or ladders. At first sign, remove rust and touch up immediately.

15. POOL PARTS
Never modify the pool or accessories, or remove or drill holes in the pool, deck or ladder components unless instructed. Your pool wall is made of thin metal, there is an inherent cut hazard with metal so use gloves during installation. Always use Original Equipment Manufactured parts for your replacement parts.

FOLLOW ALL SAFETY INSTRUCTIONS
Read and follow all safety instructions packaged with pool, ladder, deck or any other accessory. Additional pool safety publications can be obtained by contacting: The Association of Pool & Spa Professionals (www.apsp.org)

IMPORTANT NOTICE READ BEFORE INSTALLATION!

The safety stickers must be installed as per following instructions. Failure to properly install warning labels will void warranty. Failure to mount these safety labels may subject you to substantial liability in case of injury. These warnings are not to be removed under any circumstances! If they become discolored or fall off please request replacements which will be sent at no charge.

PLACE SIGN ON LINER ABOVE WATER LINE, OPPOSITE ENTRY TO POOL

PLACE SIGN ON WALL NEXT TO POOL ENTRY

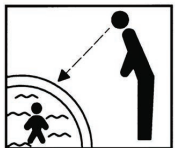

REMEMBER TO WATCH CHILDREN

R.01/18

IMPORTANT INFORMATION

It is EXTREMELY IMPORTANT to follow these instructions when you're installing a base underneath your pool liner. If this is done incorrectly your pool wall will break or become permanently damaged. Failure to follow these instructions will result in pool wall damage that voids the warranty.

Using fine mason sand (free of rocks and debris), lay a 3 inch thick bed of sand across the entire inside of the pool (wall-to-wall) to form your base. Build a sand cove against the pool wall by creating a 4" angle of sand or use foam pool cove (on to of the 3 inch sand base) giving you a total cove height of 7 inches where the base meets the pool wall. It is very important to make sure that the vinyl pool liner is supported by the proper sand base height. There should be NO AIR SPACE between the vinyl pool liner and the base that it's resting on.

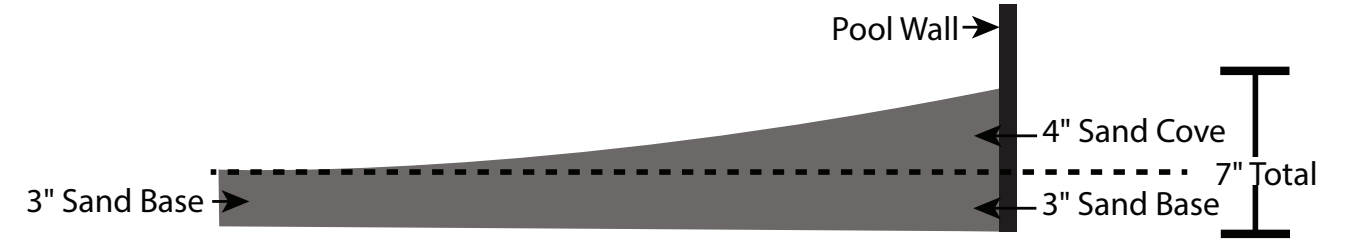

IMPORTANT: If using foam cove, install it on top of the 3 inch sand base.

IMPORTANT INFORMATION ABOUT YOUR LINER

We do not make or supply liners for our pools.

Please contact your liner's manufacturer with questions or if instructions are not included with the liner.

Liner must be installed per the liner manufacturer's instructions.

Incorrect liner installation may void the warranty.

Section 1

GENERAL INSTRUCTIONS - OVAL POOLS
GROUND PREPARATION

PARTS LISTING

Aurora RRR
PAUR-54RRRRRR330
Round

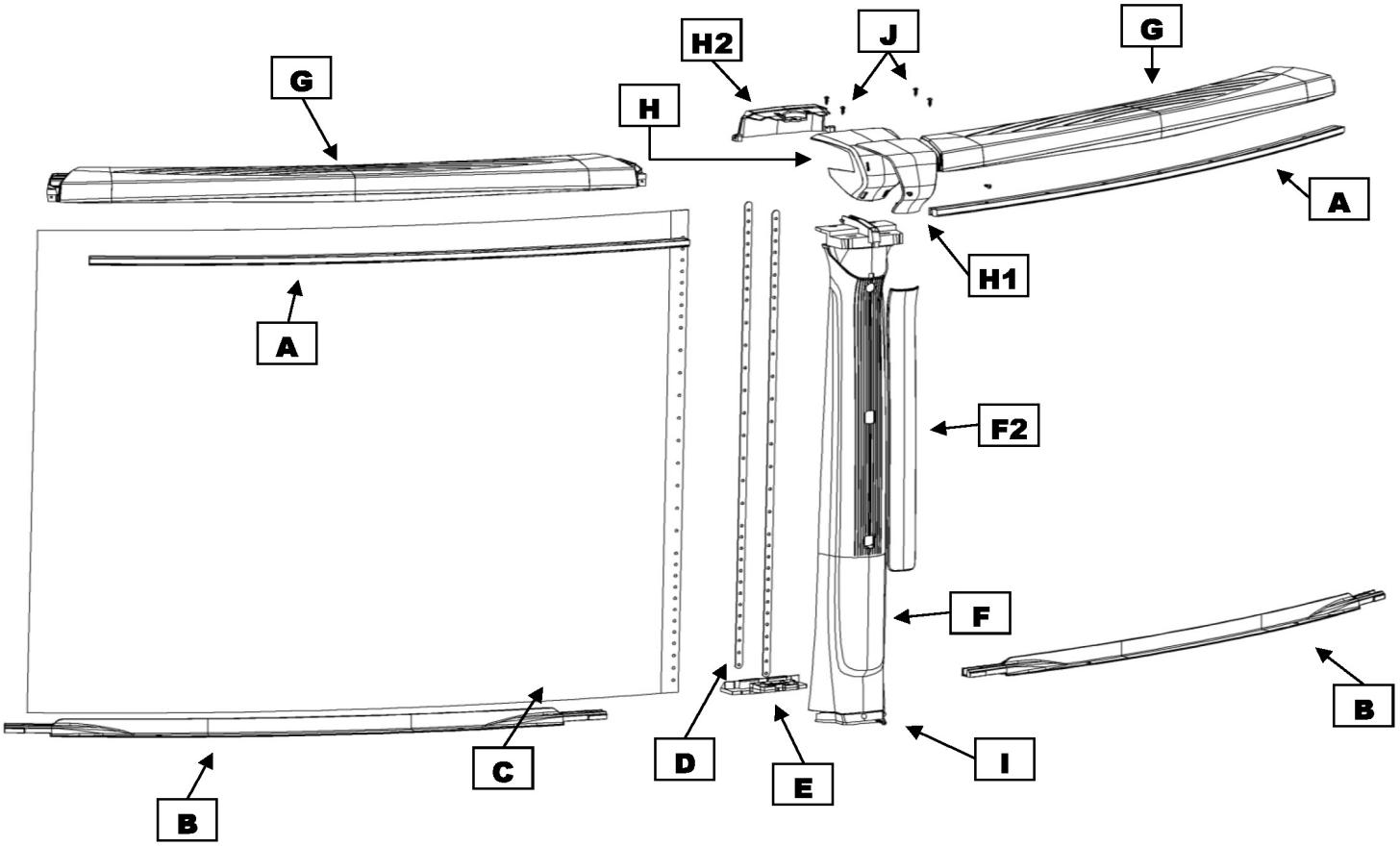

IMPORTANT NOTE:
Make sure you have all the parts necessary before you start installation.

Section 1

GENERAL INSTRUCTIONS - OVAL POOLS
GROUND PREPARATION

PARTS LISTING

Aurora RRR
PAUR-YM54RRRRRR330
Yardmore
Straight Section

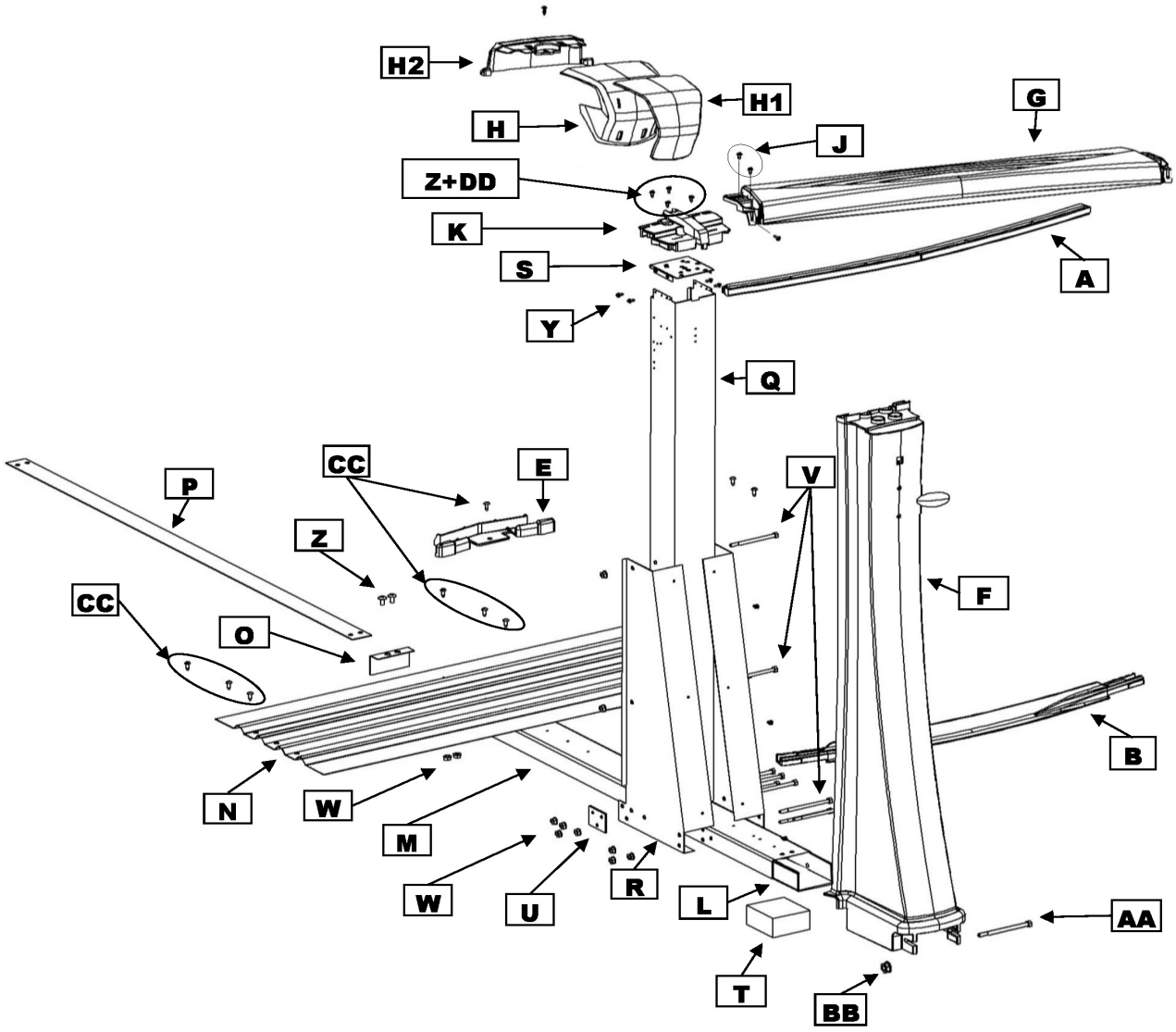

Section 1

GENERAL INSTRUCTIONS - OVAL POOLS
GROUND PREPARATION

PARTS LISTING

			Quantity required for installation (by pool size)		
Index #	Description	Part #	1526	1530	1833
A	Stabilizer (Round section)	1071507160000	8	8	10
A	Stabilizer (Straight section)	10747000042	4	6	6
A	Stabilizer-transition (End of straight section)	1071507160010	4	4	4
B	Bottom rail (Round section)	1081547000000	8	8	10
B	Bottom rail (Straight section)	10847000042	4	6	6
B	Bottom rail-transition (End of straight section right)	1081547000020	2	2	2
B	Bottom rail-transition (End of straight section left)	1081547000030	2	2	2
C	Steel wall		1	1	1
D	Steel bar	209031	2	2	2
E	Bottom plate	11207100000	10	10	12
E	Bottom plate (straight section)	10447000000	6	8	8
F1	Upright	10248440004	10	10	12
F2	Upright Insert	13057440010	10	10	12
F	Upright cover (straight section)	10248000004	6	8	8
G	Top ledge (regular)	10148360000	12	12	14
G	Top ledge (straight side section)	10148360042	4	6	6
H	Ledge cover	10348440000	10	10	12
H	Ledge cover oval	10348440001	6	8	8
H1	Ledge cover insert	13057440020	10	10	12
H1	Ledge cover oval insert	13057440030	6	8	8
H2	Ledge cover (inner)	10348440010	16	18	20
I	Stainless steel screw 12 x 1-1/2”	2PPS112	10	10	12
J	Stainless steel screw 12 x ¾”	V12X34	117	131	145
K	Resin top plate	1040033A01	6	8	8
L	Under channel	15933	6	8	8
M	Steel strap end channel	16539	6	8	8
N	Steel pressure plate	16549	6	8	8
O	Oval channel end cap	22726	6	8	8
P	Strap 15’	16725	9	12	
P	Strap 18’	16726			12
Q	Straight side steel upright	22151	6	8	8
R	Right gusset	16375	6	8	8
R	Left gusset	16374	6	8	8
S	Metal top plate	10136R	6	8	8
T	Foam block	29917	6	8	8
U	Washer 3 holes	16663	12	16	16
V	Bolt 5” x 5/16 - 18	99-0073	60	80	80
W	Nut 5/16 – 18	99-0027	84	116	112
X	Screw ½” x 5/16 – 18	99-0026	24	36	32
Y	Screw ½” #10	99-0068	50	60	60
Z	Screw 1” #10	99-0070	30	40	40
AA	Bolt 5 ½” x ¼ - 20	2PCB520	6	8	8
BB	Nut ¼ - 20	2FGS422	6	8	8

Section 1

GENERAL INSTRUCTIONS - OVAL POOLS
GROUND PREPARATION

PARTS LISTING

Product Description:	Aurora Oval				Revised Sept 2021
Product Code:	PAUR-YM54RRRRRR330				
			Quantity required for installation (by pool size)		
Index #	Description	Part #	1526	1530	1833
CC	Pan Phil Sefl Drill 12x3/4	99-0150	40	55	55
DD	Fender Washer #10 BS 5/8 OD	FW10x58S	30	40	40
*	Hardware bag	1051526380	1		
*	Hardware bag	1051530380		1	
*	Hardware bag	1051833380			1
**	Hardware bag for wall	1050000R54	1	1	1
***	Hardware bag	16720	1	2	2
***	Hardware bag	16722	1		
****	Hardware bag	10522116	1		
****	Hardware bag	22113		1	
****	Hardware bag	10522117			1
	Upright clip	6ADP10900A00	20	20	24
	Screw\Truss\Quadrex\1/4-20\7/8"\18-	B14X20X78	49	49	49
	Nut ¼ - 20	2FGS422	49	49	49
	Installation DVD	SACWBIAUR	1	1	1

* In the hardware bag you will find parts: #2PPS112 - #V12x34

** In the hardware bag for wall you will find parts: #B14X20X78 - #2FGS422

*** In the hardware bag you will find parts: #99-0073 - #99-0027 - #16663

**** In the hardware bag you will find parts: #99-0073 - #99-0027 - #2PCB520 - #99-0068 - #99-0026 - #99-0070 - #V12x34 - #2

F:This piece is composed of 10248440002 -13057440010 (insert)

H1 : This piece is composed of 10348440000 -13057440020 (insert)

H1 : This piece is composed of 10348440001 -13057440030 (insert) (Straight section)

Section 1

GENERAL INSTRUCTIONS - OVAL POOLS
GROUND PREPARATION

READ ALL INSTRUCTIONS CAREFULLY
The approximate time it takes for installation, excluding earthworks and filling is about 1 day.
You will need at least 3 people to help with installation.

A. DETERMINE THE LOCATION OF YOUR POOL

1. The Terrain

Pay special attention to choosing the right location for your pool:
• Choose a large area, as flat and level as possible and well drained. ***(Image 1)***

• Choose a spot on dry, firm earth (stabilizer or other)—do not install the pool on asphalt, tar or oil based surfaces, gravel, peat moss, wood or chemically treated soil.

• Check with your pool dealer to see if Nut Grass grows in your area. This type of grass may grow up through your pool liner. Your dealer will be able to advise how best to treat the site.

• Sloped areas will need to be made level by digging away high spots, not by filling low spots—be prepared to hire earth-moving equipment if necessary.

• Ensure the earth is well compacted and a wall is placed to prevent the earth from seeping out.
(Image 2)

• If you need to install partly in the ground, you must contact your dealer to see if this is an option for you and that you meet law requirements in your jurisdiction. ***(Image 3)***

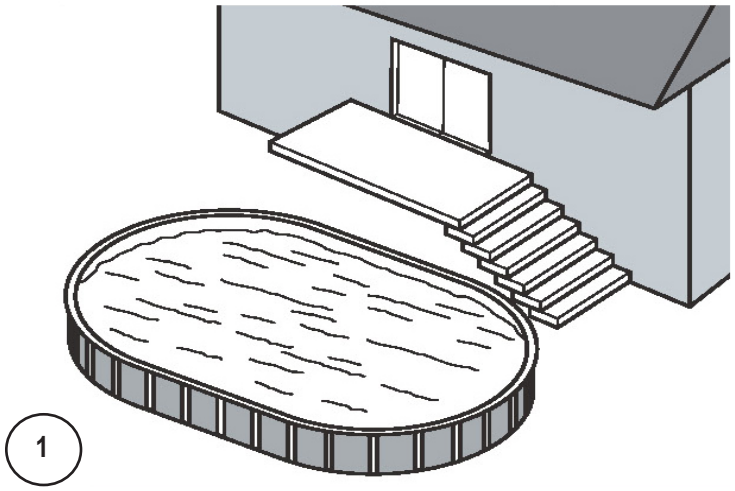
1

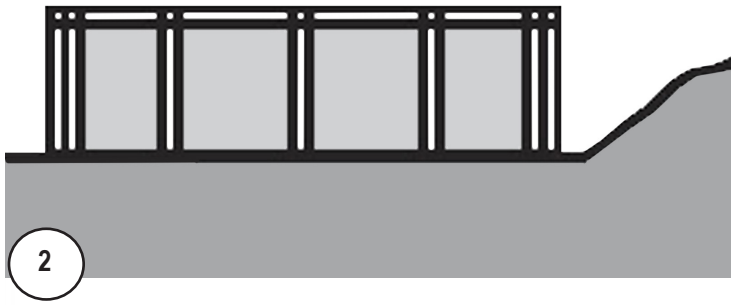
2

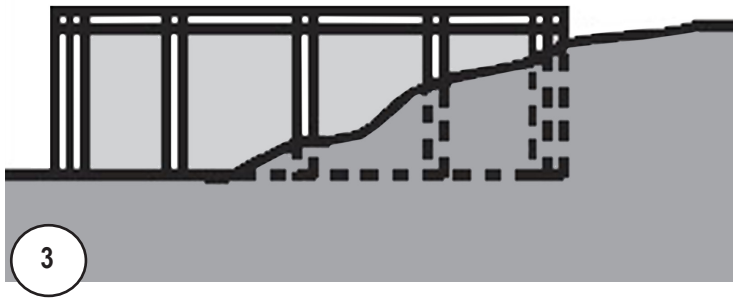
3

Important Note:
Ground preparation is one of the most important steps in the installation process. A proper foundation will ensure the rest of the pool assembly goes smoothly and that no problems will occur when the pool is filled with water.

Section 1

GENERAL INSTRUCTIONS - OVAL POOLS
GROUND PREPARATION

A. CONT. DETERMINE THE LOCATION OF YOUR POOL

2. Things to Avoid

Do not locate your pool near or on any of the following ***(Images 4 to 6)***:

• Overhanging tree branches.

• Overhead wires and clotheslines.

• Buried pipes and wires. Contact your gas, electric and telephone utilities to find buried pipes and wires before you dig.

• Areas with poor drainage.

• Grass, stones and roots. Grass will rot underneath the pool liner, and stones and roots will damage the pool liner.

• Areas recently treated with oil-based weed killers, chemicals or fertilizers.

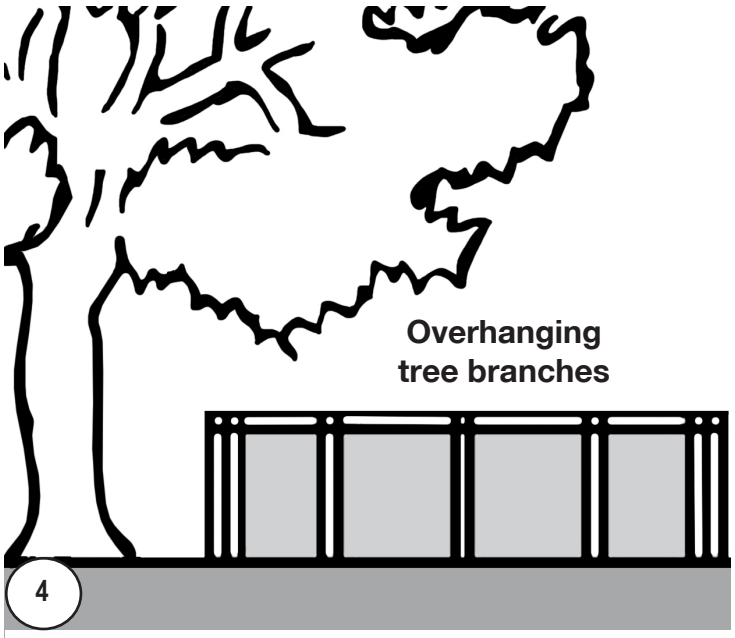

3. Plan Ahead

• Will you be adding an adjacent deck later?
Be sure to leave room.

• Will you be using pool accessories or other appliances that need electricity or gas? Locate your pool near these services or plan to have them installed later by a licensed contractor.

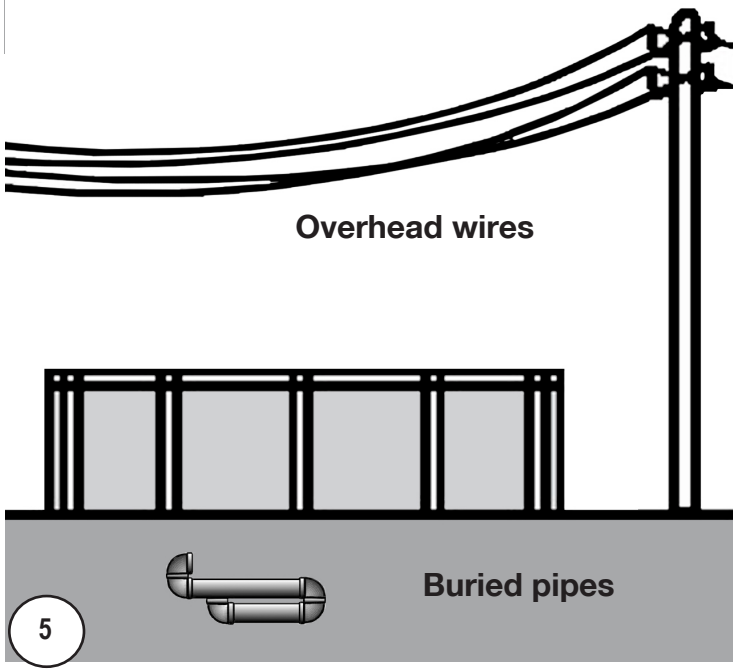

⚠ Important Note:
When locating the centre of the pool, be sure to take into consideration any structures (deck, patio, house) or relevant items (change rooms, gazebo, etc.) that the pool may need to line up with and ensure that the pool is in the most visual pleasing location for your property.

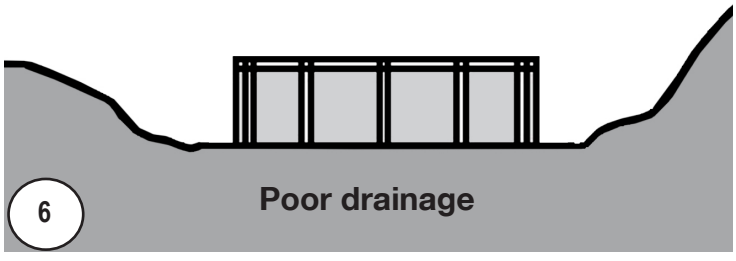

Section 1

GENERAL INSTRUCTIONS - OVAL POOLS
GROUND PREPARATION

A. CONT. DETERMINE THE LOCATION OF YOUR POOL

4. Tools Needed

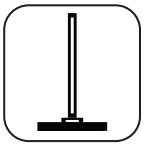
Compactor

Hammer

Water hose

Level

File

Vacuum cleaner

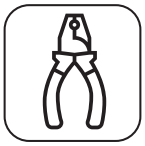
Pliers

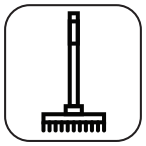
Rake

Lawn roller

Metal snips

Screwdriver

Wheelbarrow

Shovel

Spraypaint

Mallet

Measuring tape

Duct tape

Trowel

Wrench

Gloves

Important Note:
Wall edges, skimmer and water return holes may be sharp, it is important to wear gloves when installing.

List of required materials

- Straight wood plank
- Material that provides a permanent base (ex. Crushed stone)
- Fine sand (void of debris)
- Cement blocks (5cm x 20cm x 40cm / 2”x 8”x16”) (optional)
- 2x Plywood (60cm x 120cm /2ft x 4ft)
- Wood board (30cm x 20cm / 1ft x 1ft)
- Vinyl covered hooks (to hold wall steady)
- String and stakes & wooden pegs
- Prefabricated cove sections (optional)
- Pool carpeting (optional)
- Rope
- Polyethlyne Plastic Sheeting

- Optical Level

Can be useful for precise measurements

Section 1

GENERAL INSTRUCTIONS - OVAL POOLS
GROUND PREPARATION

B. PREPARE THE FOUNDATION OF YOUR POOL

1. Mark out the area

a. The next following steps will show you how to mark out the area you need for the oval pool. This marked area will be larger than the pool size itself, but this space is needed. Find a site where the ground is stable, level and well drained. Once you have selected your site, determine where the middle of your pool will be.

See Diagrams:
Please see in the next page for an EXAMPLE on how to correctly mark your pool area.
Please verify your pool's FOOTPRINT for correct measurements on the last pages of this Section 1.

b. Drive a peg into the ground at the centre point. ***(Image 1)***

c. Now you must make the round ends that will be the oval part. In order to do so, you will have to determine the center of the radius on each side and drive a peg into the ground. ***(Image 2)***

d. Using a length of string tied between the peg and a can of spray paint mark the circles on the ground. ***(Image 3)***

e. Once the center has been established, and the measurement of the pool itself has been determinded, you must now determine the outer limits of the perimeter of your pool. Add 12" (30cm) outside this measurement to determine pool perimeter. ***(Image 4)***

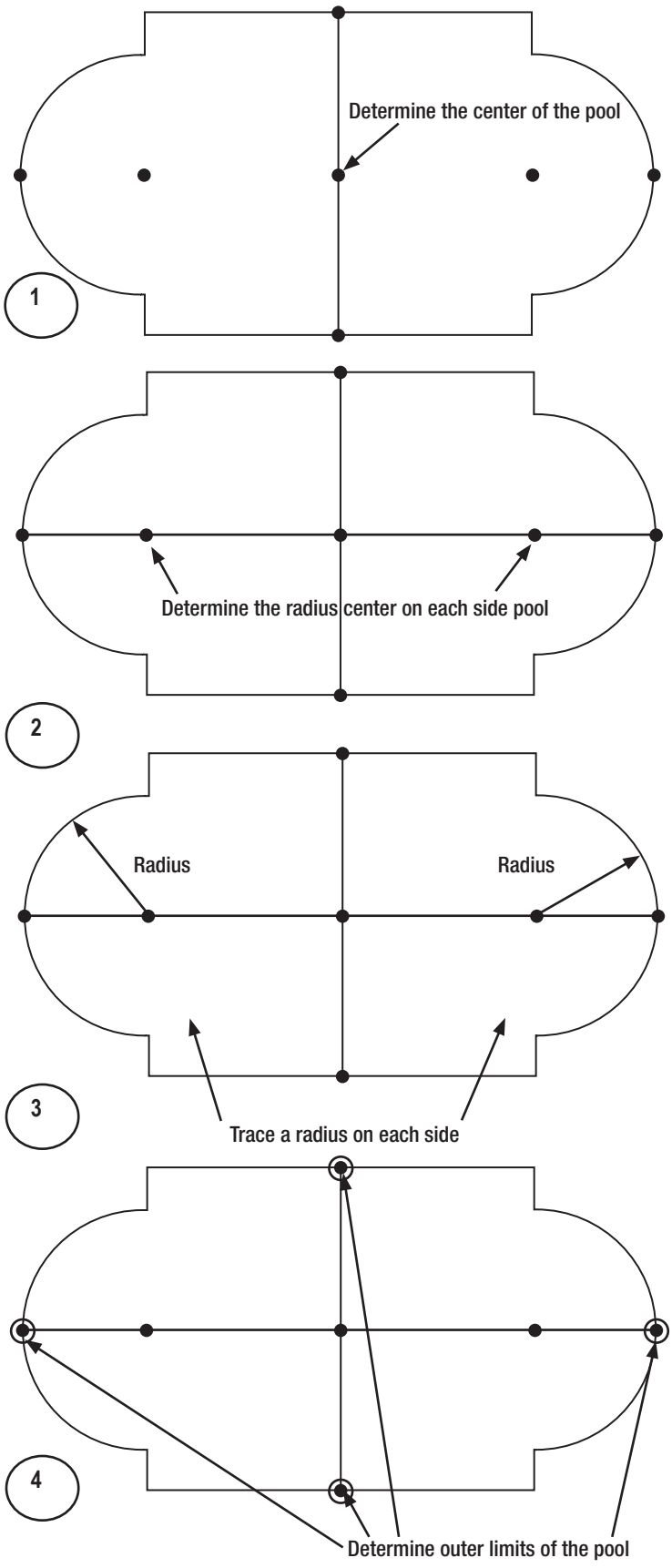

Section 1

GENERAL INSTRUCTIONS - OVAL POOLS
GROUND PREPARATION

B. CONT. PREPARE THE FOUNDATION OF YOUR POOL

f. Mark areas along both straight sides of your oval. Use pegs and string as a guide for the can of spray paint to mark straight lines. ***(Image 5)***

g. You now have the space marked out that is needed for your oval pool. ***(Image 6)***

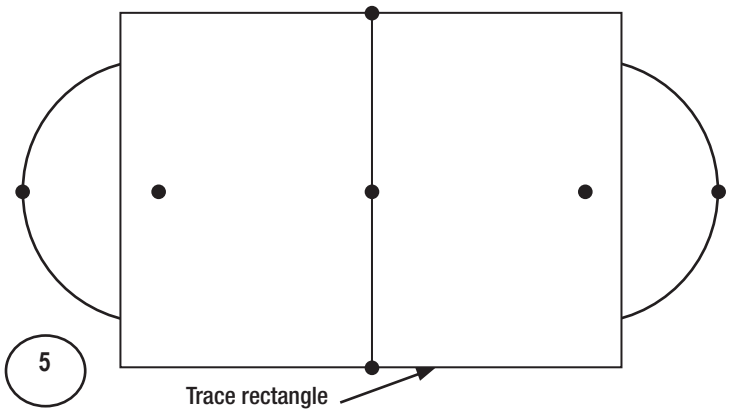

5

2. Remove the sod

a. Remove the sod from the area you have just outlined. ***(Image 7)***

b. Remove all debris (rocks, roots, etc) using a rake. Then compact the ground to achieve a firm base.

You can use a sod removal machine.

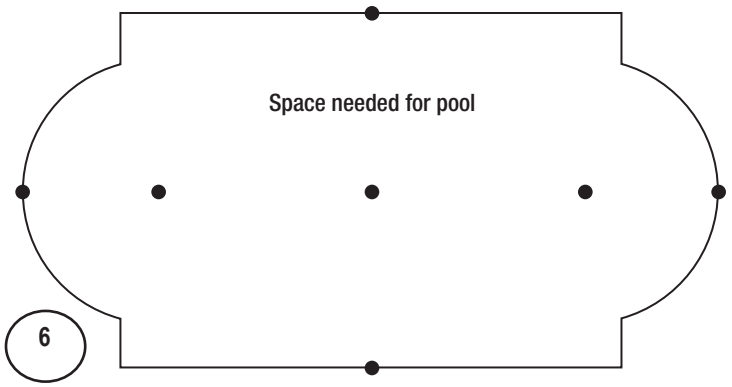

6

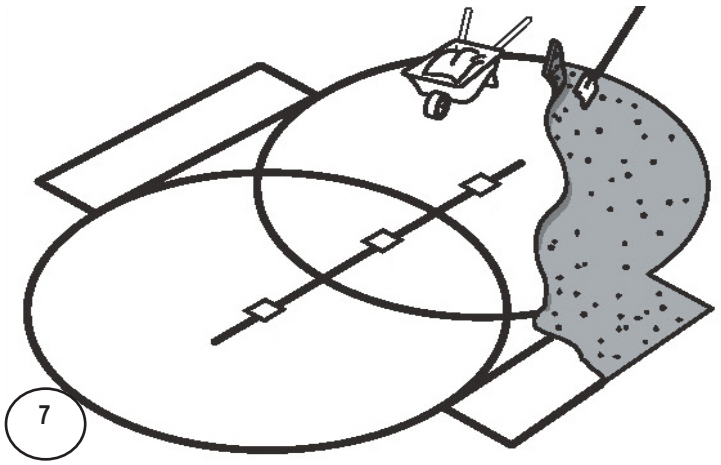

7

⚠ Important Note:
Your pool must be perfectly level. Take the time you need to be sure your foundation is perfecty level.

Section 1

GENERAL INSTRUCTIONS - OVAL POOLS
GROUND PREPARATION

B. CONT. PREPARE THE FOUNDATION OF YOUR POOL

Example on how to mark out pool area for an 18 x 33

Please be sure to use your pool's footprint for your pool size on the last pages of this Section1.

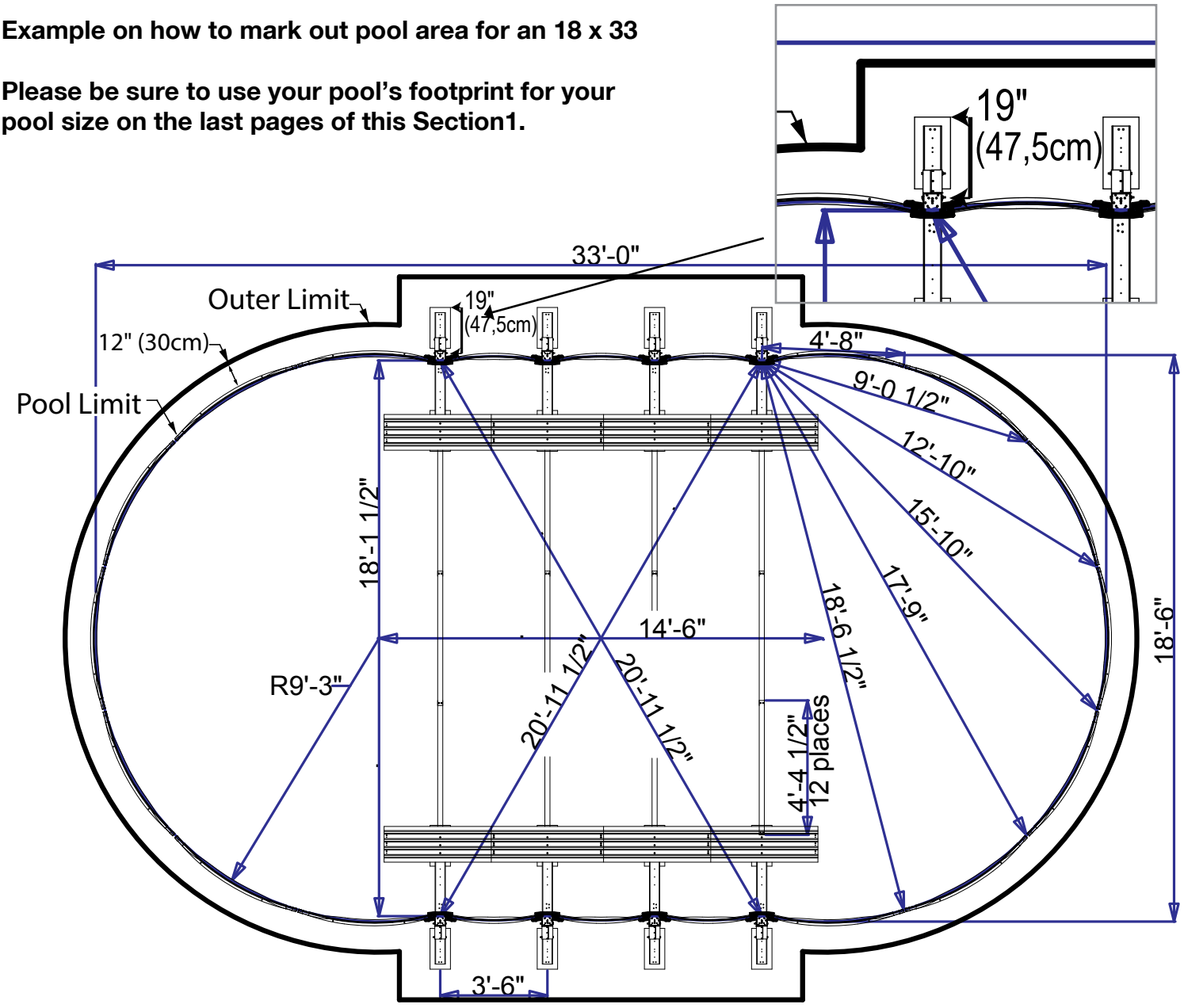

Perimeter 1047" (hole to hole)-Track length measured in track slot
All dimensions are in inches

EXAMPLE

Section 1

GENERAL INSTRUCTIONS - OVAL POOLS
GROUND PREPARATION

B. CONT. PREPARE THE FOUNDATION OF YOUR POOL

3. Make the area flat and level

a. Remove all the high spots with a shovel, hoe or rake. To make sure your pool is stable, compact the ground well before adding the sand. Be prepared to hire earth moving equipment if you need to level a large area. Remember, your pool must be level across the diameter of the pool. ***(Image 8)***

b. Small dips and hollows may be filled in, but the soil must be hard-packed with a tamping tool or a soil compactor machine.

c. Take material such as rock dust or fine mortar that can conform a solid, permanent base and deposit this material around the rim of the basin. ***(Image 9)***

d. The material used should be spread around the perimeter of the pool to a width of 24" (60cm) and a thickness of 2" (5cm). ***(Image 10)***

e. Recheck the outer perimeter of the oval shape, where the pool wall will be placed. Compact the ground and make sure there are no high or low spots. The bottom edge of the pool wall must rest flat on the ground and have no gaps under it.

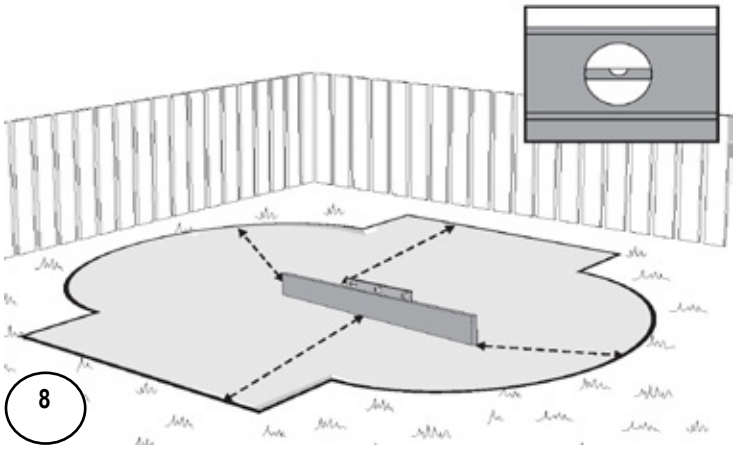
8

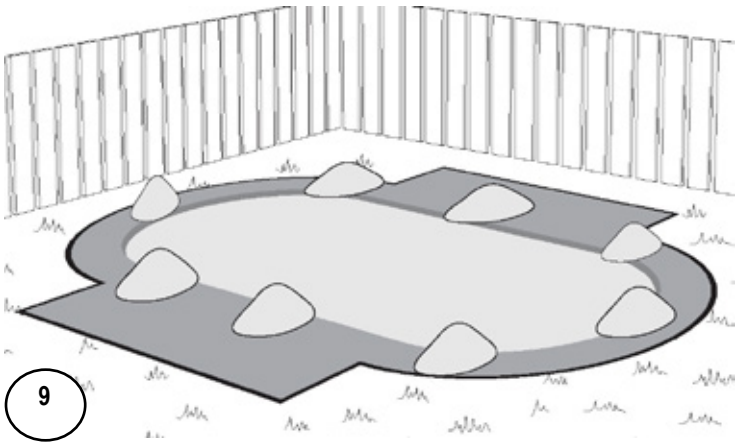
9

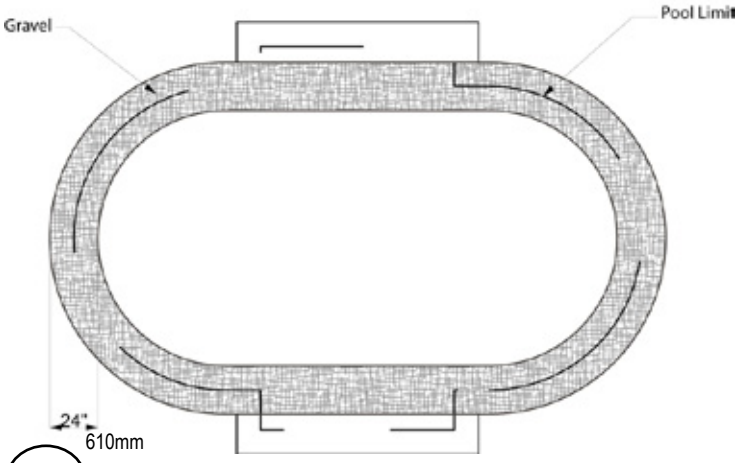

10

Helpful Hint:
Use the optical level to ensure that the ground is perfectly flat and level.

Important Note:
Your pool must be perfectly level. Take the time you need to be sure your foundation is perfectly level.

Section 1

GENERAL INSTRUCTIONS - OVAL POOLS
GROUND PREPARATION

C. PRE-ASSEMBLY OF THE STRAIGHT SECTION

1. Assembling the strap end channel

a. Overlay the strap end channel over the under channel (under channel is belly-up). ***(Image 11)***

b. Before bolting the strap sections to the strap end channels, Insert the foam block in the front part of the strap end channel, insert it at least 1 1/2" past the edge of the channel. ***(Image 12)***

c. Align the holes of the strap end channel with those of the underbox channel, but do not secure them with the bolts at this time. ***(Image 13)***

d. Slide the steel upright over the strap end channel making sure that the holes line up. The steel upright opening must face the longest part of the strap end channel. ***(Image 14)***

HELPFUL HINT: The top channel extends past the under channel towards the inside of the pool.

11

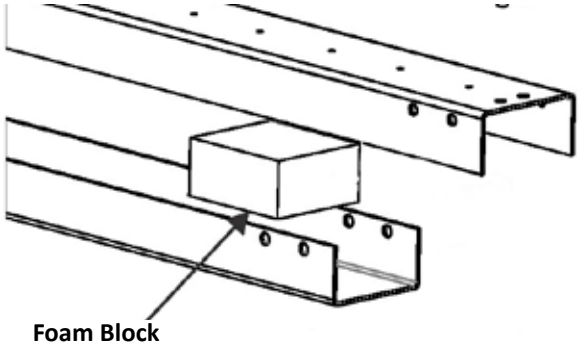

12

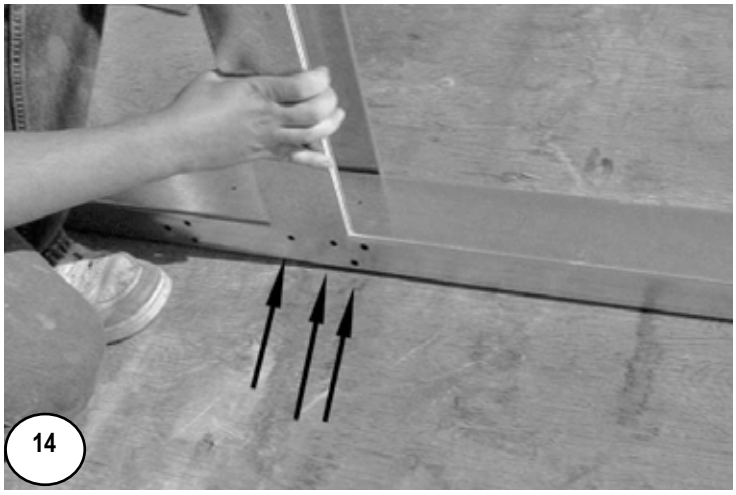
14

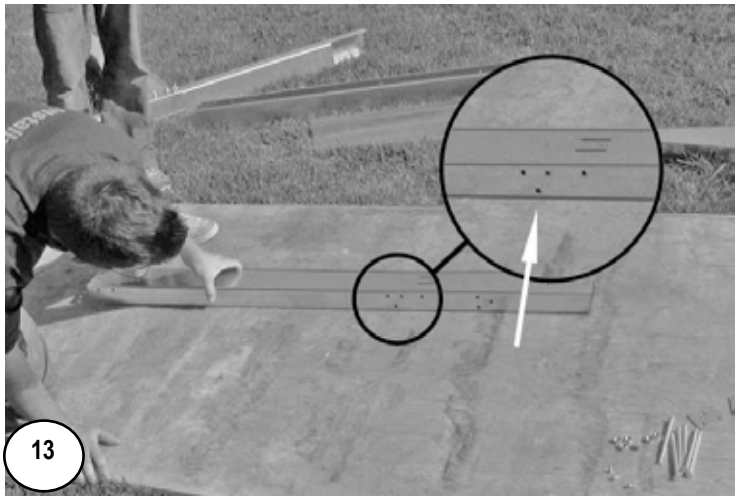
13

Section 1

GENERAL INSTRUCTIONS - OVAL POOLS
GROUND PREPARATION

C. PRE-ASSEMBLY OF THE STRAIGHT SECTION-Yardmore Hardware

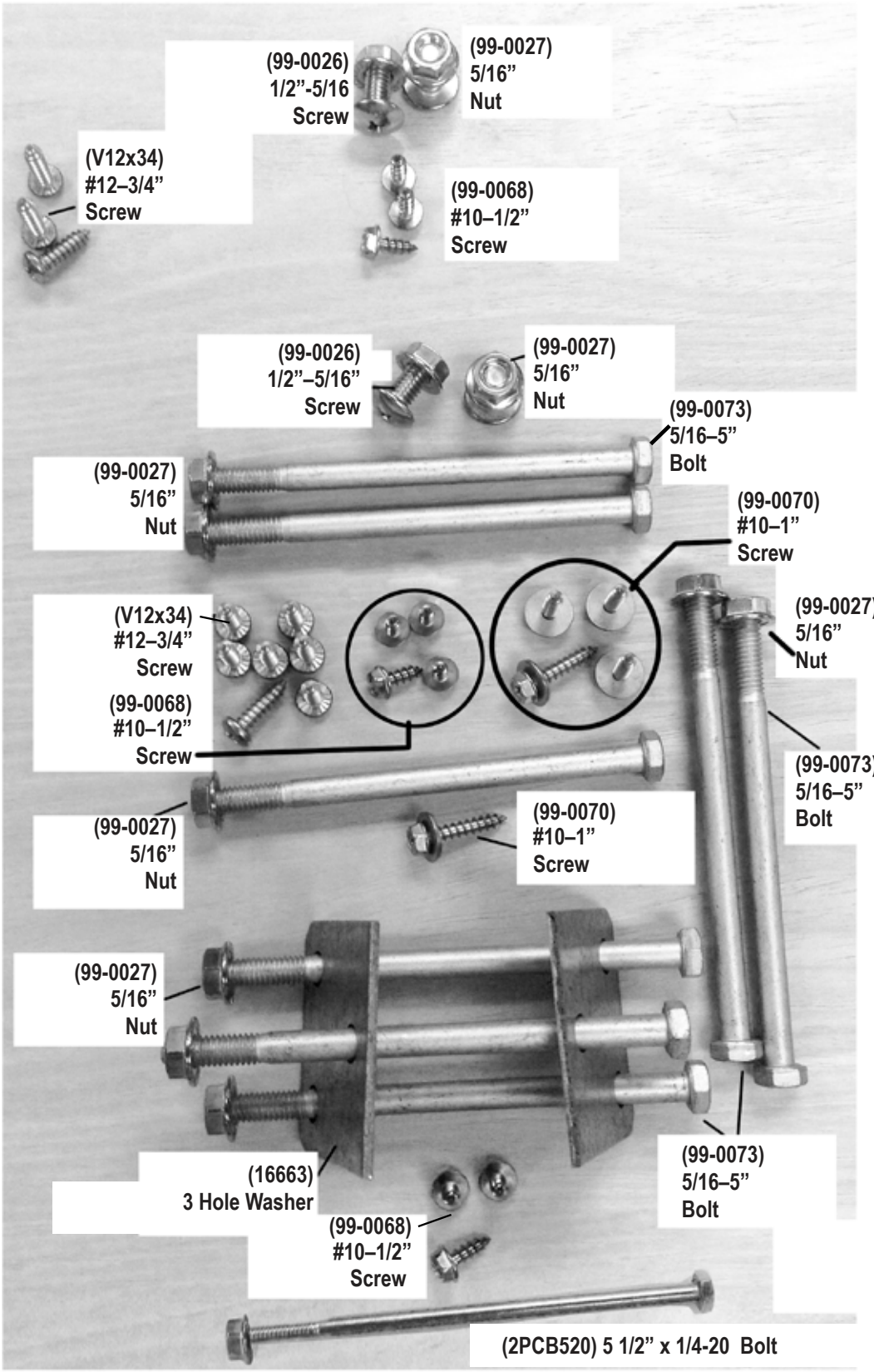

GENERAL INSTRUCTIONS - OVAL POOLS
GROUND PREPARATION

C. CONT. PRE-ASSEMBLY OF THE STRAIGHT SECTION

e. Insert the left and right gussets. the pieces are marked "L" and "R". Ensure that the holes are aligned. ***(Image 15)***

f. All holes should be lined up at this point. Use the 5/16" x 5" bolts (99-0073) and 5/16" nuts (99-0027) to connect the channels and to connect the gussets to the steel uprights. **Remember to include the three-hole washers (16663) on the front side of the gussets.** ***(Images 16 & 17) DO NOT TIGHTEN THE BOLTS.***

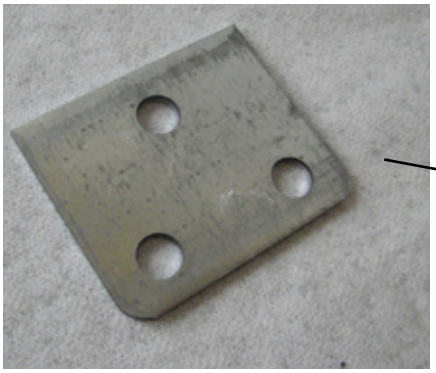

THREE-HOLE WASHER

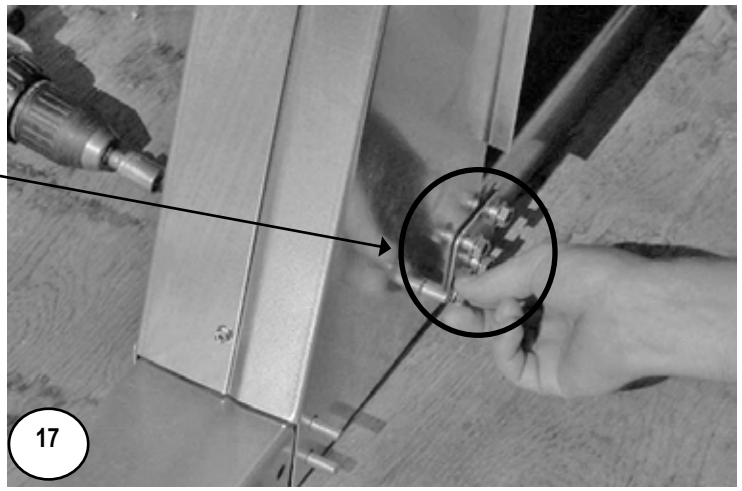

Section 1

GENERAL INSTRUCTIONS - OVAL POOLS
GROUND PREPARATION

C. CONT. PRE-ASSEMBLY OF THE STRAIGHT SECTION

g. Once these pieces are in place, screw the left and right gussets to each other using three #10-1/2" screws (99-0068). ***(Image 18)***

h. In order to ensure that the steel upright and the channels are at right angles during the assembly, push the ends of the steel upright and the channels and tighten the bolts at the same time. First, tighten the bolts of the channels by maintaining a good pressure. For the screws on the steel upright and gussets, sufficiently tighten the bolts to let the screws exceed 1/8". ***(Images 19 & 20)***

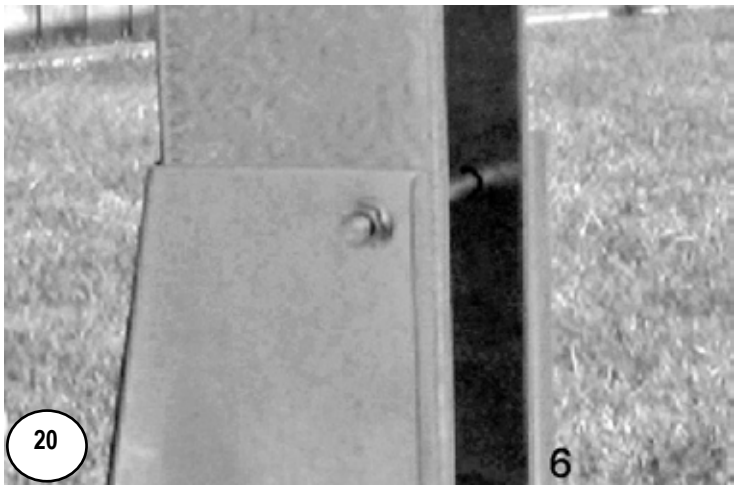

Section 1

GENERAL INSTRUCTIONS - OVAL POOLS
GROUND PREPARATION

C. CONT. PRE-ASSEMBLY OF THE STRAIGHT SECTION

i. Place a top plate on the top of each of the pool steel structures. The holes of the top plate and steel structure must be aligned and screwed on the side using three #10-1/2" screws (99-0068). ***(Image 21)***

NOTE: Be sure to verify your pool's footprint to ensure correct strap lengths.

j. Slide a strap under the front part of a channel, the two holes in these End Channel Caps will line up with the two holes in the straps. ***(Image 22)***

k. The End Channel Caps are secured in place using the same two 5/16" x 1/2" screws (99-0026) and 5/16" nuts (99-0027) that are used to secure the straps to the strap end channels. ***(Image 23)***

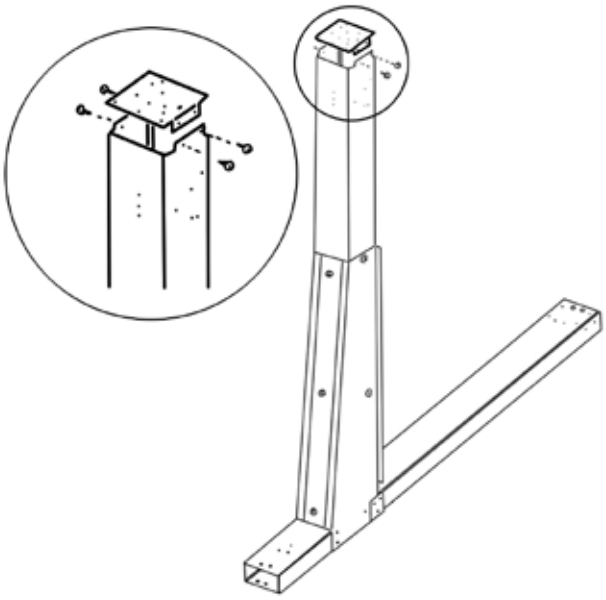

21

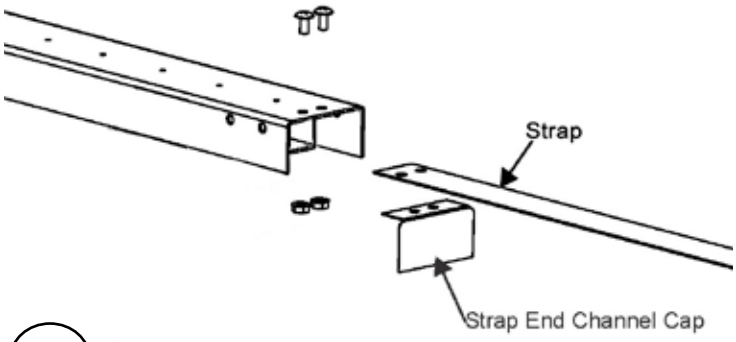

22

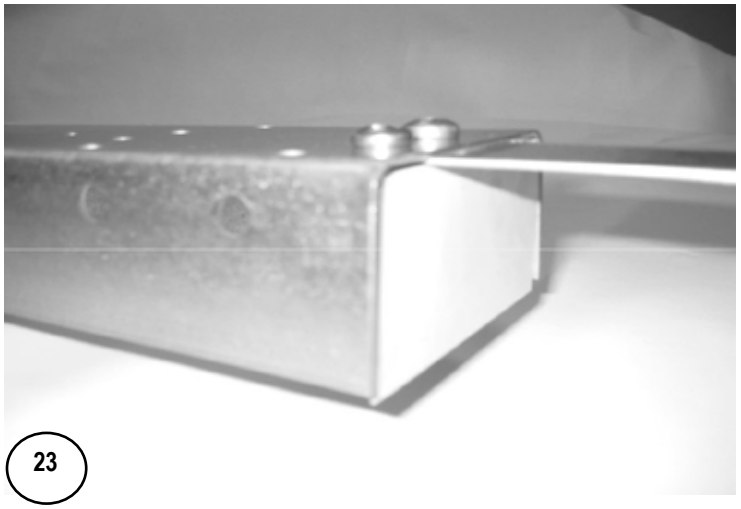

23

Helpful Hint:
Do not be alarmed if you are not using all of the holes in the strap end channels.

Section 1

GENERAL INSTRUCTIONS - OVAL POOLS
GROUND PREPARATION

C. CONT. PRE-ASSEMBLY OF THE STRAIGHT SECTION

1. Bottom plates - straight section

a. Screw the bottom plate on the strap end channel with a #10-1" screw (99-0070). The bottom plate has to sit on the edge of the strap end channel and the steel upright. ***(Images 24 to 26)***

b. The installation of the bottom plates for the round section will continue in Section 2.

Proceed to the next step, **Measuring for the buttress trenches.**

Helpful Hint:
Do not be alarmed if you are not using all of the holes in the strap end channels.

Section 1

GENERAL INSTRUCTIONS - OVAL POOLS
GROUND PREPARATION

D. GROUND PREPARATION FOR THE BUTTRESS

1. Measuring for the buttress trenches

a. In order to measure where trenches need to be dug for the placement of the buttress, you must first draw a perpendicular line in order to create a perfect 90 degree angle. From the pool center, trace a straight line to the oval perimeter ***(Image 27)***

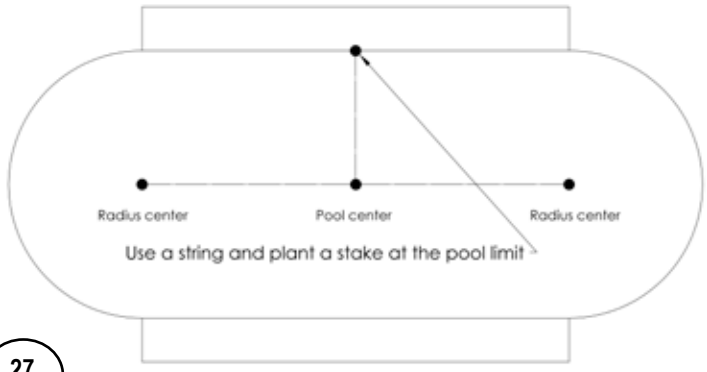

27

b. In order to ensure that your line is perpendicular, measure from each radius center to the top of your line. The measurement should be exactly the same on each side. If not, adjust until both are the same and you will now have a perfect perpendicular line, therefore creating a perfect 90 degree angle.
(Images 28 & 29)

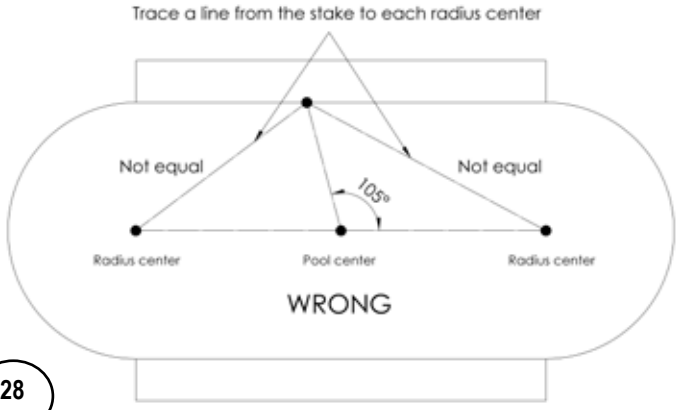

28

c. Repeat the first two steps to create a perpendicular line in order to create a perfect 90 degree angle for the other side of the oval pool.

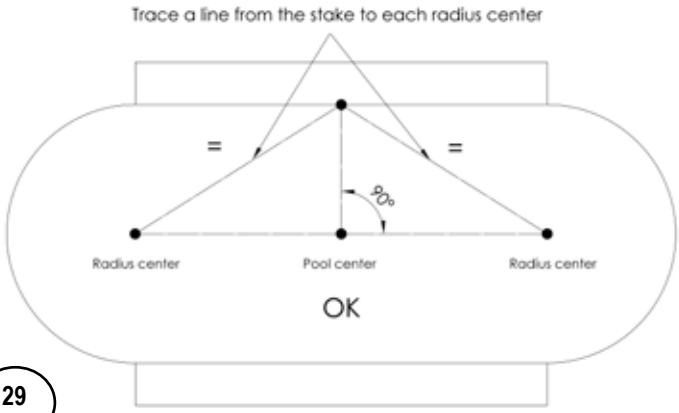

29

Important Note:
It is very important that when you follow the instructions on the next page, that you apply the next steps to only one side of the pool at a time. It is imperative that you follow the next steps in order.

Section 1

GENERAL INSTRUCTIONS - OVAL POOLS
GROUND PREPARATION

D. CONT. GROUND PREPARATION FOR THE BUTTRESS

2. Digging the buttress trenches

Odd number of trenches;

a. If your oval pool contains an even number of buttresses, please see next page for Even number trenches. If your oval pool contains an odd number, position the buttress temporarily on the straight center line from the middle. ***(Image 30)***
Note: Odd number means the total of sections on one side, for example a 12 x 24 pool has Odd number.

b. Trace around the buttress and dig a trench. Dig the trench 3 to 5 inches deep by 10 inches wide and the length of 52 1/2 inches long. ***(Image 31)***

c. The bottom plates for the straight section must be at the same level with the crushed stone. If you do not put crushed stone, understand that the bottom plates all around the pool must be at the same level. The warranty will void if you do not comply with this requirement.

d. Apply crushed stone at 1 inch, then compress. Place a concrete block of 2 inches at each end of the trench.

Important Note:
This first buttress that you install will be the reference to install the remaining butresses, therefore ensure that measurments and placements are exactly where they need to be.

e. Once the block is installed, measure the depth of the trench, it must be 2 inches deep. Make sure the block is level by using an optical level. Ensure that both blocks are at the same level.

f. Place the buttress structure on the blocks and ensure that each buttress is parallel to each other. ***(Image 32)***

See Diagrams:
Please verify your pool's footprint for correct measurements on the last pages of this Section 1. Please ensure to verify the footprint of your pool size for the correct placement.

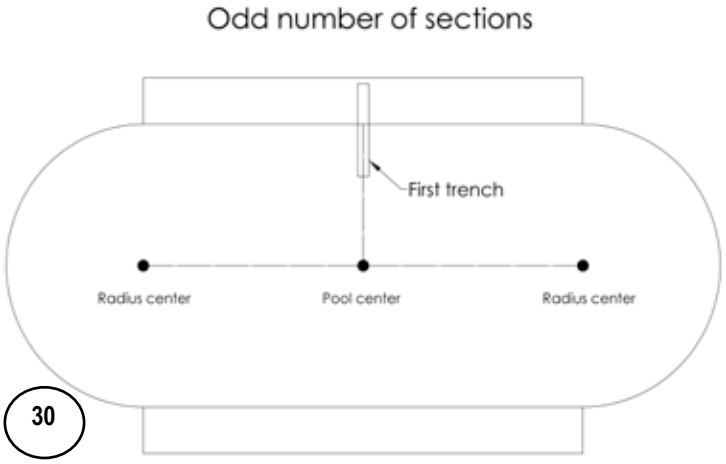

30

31

32

Section 1

GENERAL INSTRUCTIONS - OVAL POOLS
GROUND PREPARATION

D. CONT. GROUND PREPARATION FOR THE BUTTRESS

Even number of buttresses;

a. If your oval pool contains an even number of buttresses, measure from the center line out 21". Position the buttress temporarily off the straight center line from the middle. ***(Image 33)***
Note: Even number means the total of sections on one side, for example a 15 x 30 pool has Even number.

b. Trace around the buttress and dig a trench. Dig the trench 3 to 5 inches deep by 10 inches wide and the length of 52 1/2 inches long. ***(Image 34)***

c. The bottom plates for the straight section must be at the same level with the crushed stone. If you do not put crushed stone, understand that the bottom plates all around the pool must be at the same level. The warranty will void if you do not comply with this requirement.

d. Apply crushed stone at 1 inch, then compress. Place a concrete block of 2 inches at each end of the trench.

Important Note:
This first buttress that you install will be the reference to install the remaining buttresses, therefore ensure that measurments and placements are exactly where they need to be.

e. Once the block is installed, measure the depth of the trench, it must be 2 inches deep. Make sure the block is level by using an optical level. Ensure that both blocks are at the same level.

f. Place the buttress structure on the blocks and ensure that each buttress is parallel to each other. ***(Image 35)***

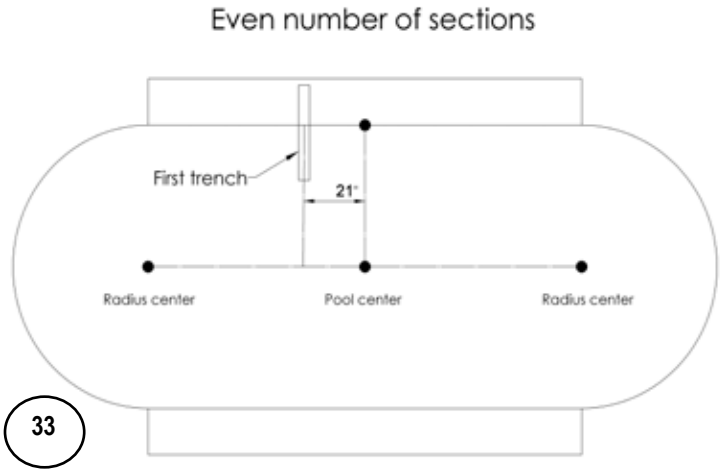

33

34

35

Section 1

GENERAL INSTRUCTIONS - OVAL POOLS
GROUND PREPARATION

D. CONT. GROUND PREPARATION FOR THE BUTTRESS

4. Finish trenches and patio stone installation

a. Continue to finish one by one the remaining trenches with patio blocks for the buttress installation. **It is important to finish one side of the oval only.**

b. Once all the trenches are dug and buttresses with patio stones are installed, **on the one side only**. Remeasure each buttress to ensure that they are all straight and that the buttress is perpendicular. ***(Image 36)***

d. From the first buttress, check to see that second buttress is 42" from center and continue to ensure that all measurements between each buttress is equal.

e. *Now add crushed stone around the buttress (do not cover) and be careful not to move the buttress. Take measurements at every upright and then check measurement again. ***(Image 37)***

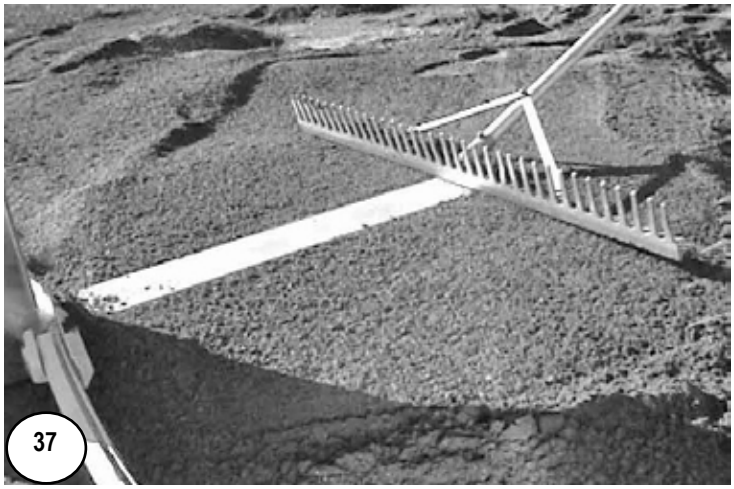

Section 1

GENERAL INSTRUCTIONS - OVAL POOLS
GROUND PREPARATION

E. ASSEMBLING THE BUTTRESS STRAPS AND PRESSURE PLATES

1. Assemble the pressure plates

a. Place crushed stone or soil where the pressure plates are going to be placed. This will have the effect of supporting the pressure plate.

b. When placing the pressure plates use the side that is corrugated and face it up, the flat side needs to face the ground. ***(Image 38)***

c. Put the pressure plates on the tip of the strap end channel to 20 1/2“ from the steel upright. ***(Image 39)***

d. For the alignment of the pressure plate there is a hole at less than one inch from the edge of the plate. This hole is facing the vertical part of the steel structure. Once the plates are in position, secure them to the channels using **three** #10-1/2 screws (99-0068), (you will see four holes but use **only three**). ***(Image 39)***

Note: Be sure that the pressure plate fits so that the end channel does not show, the pressure plate will extend about one inch past the end of the channel towards the center of the pool.

IMAGE 39 is CORRECT
IMAGE 40 IS INCORRECT

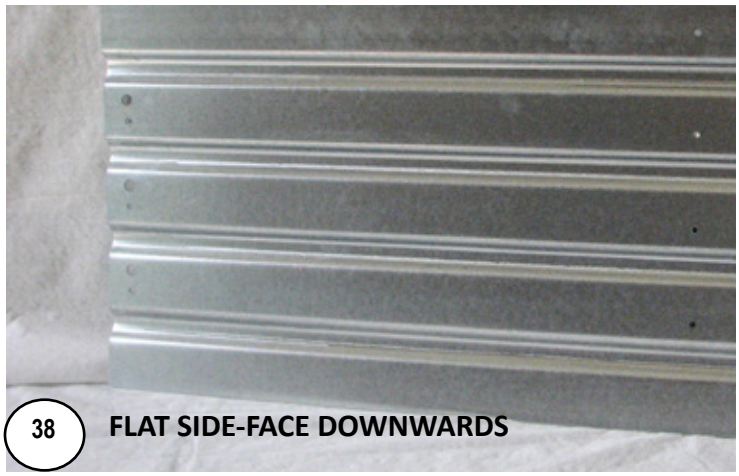

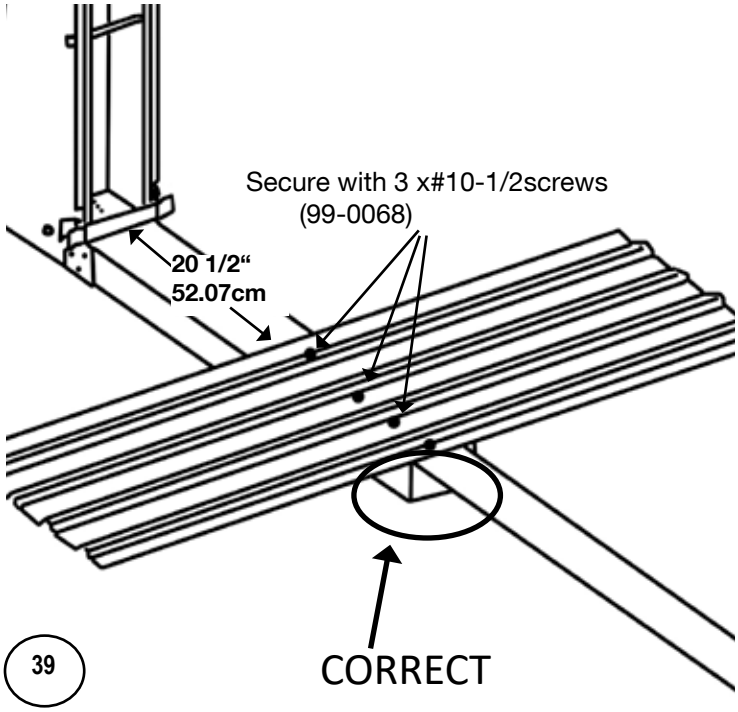

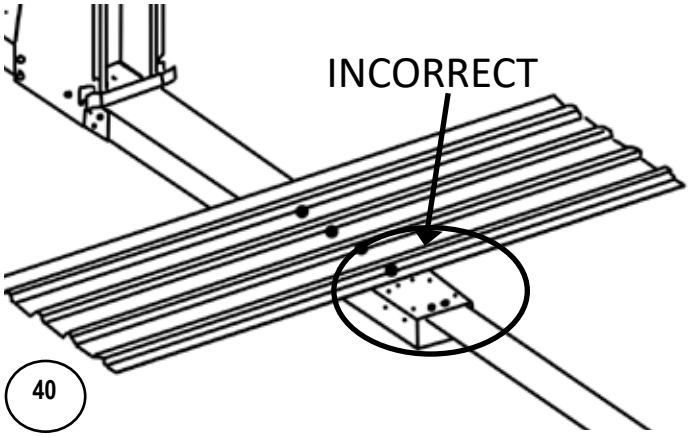

Important Note:
If the holes do not align, DO NOT drill holes! Verify the alignment of the structures.

Section 1

GENERAL INSTRUCTIONS - OVAL POOLS
GROUND PREPARATION

E. CONT. ASSEMBLING THE BUTTRESS STRAPS AND PRESSURE PLATES

e. Once all plates are secured to the channels, the plates should overlap each other. Secure the plates to each other using **three** #12-3/4“ screws (V12x34) in each overlapping area. ***(Images 41 & 42)***

You may now go back to step 2-Digging the buttress trenches, to continue for the remaining side of the oval.

41

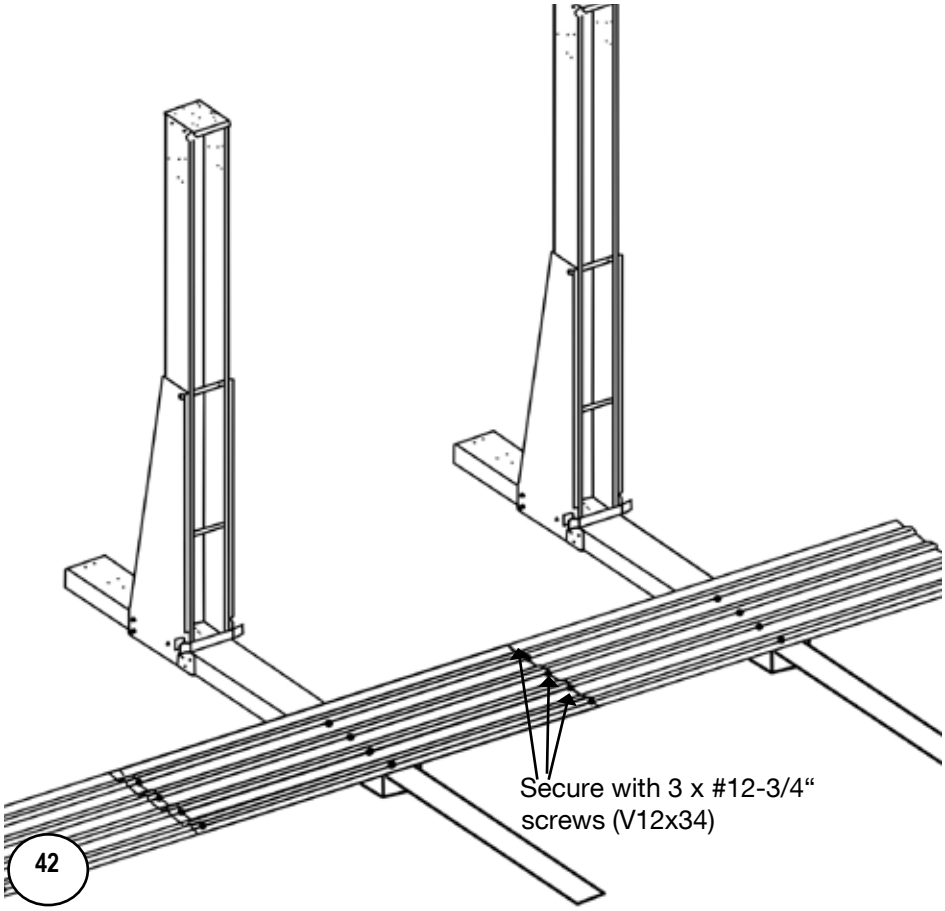

42

Important Note:
If the holes do not align, DO NOT drill holes! Verify the alignment of the structures.

Section 1

GENERAL INSTRUCTIONS - OVAL POOLS
GROUND PREPARATION

E. CONT. ASSEMBLING THE BUTTRESS STRAPS AND PRESSURE PLATES

2. Assembling remaining straps

a. Once both sides of the buttresses have been installed perfectly, check that all is measured perfectly.

b. Add the remaining straps that join across to other straps with 1/2“ x 5/16 screws (99-0026) and nuts (99-0027). Make sure the screw heads are facing upward. Remeasure and tighten screws. Recheck measurement again. ***(Images 40 & 41)***

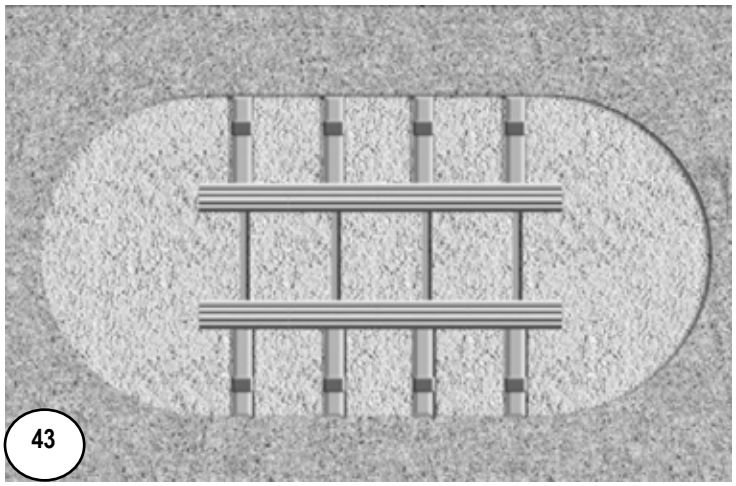

Important Note:
Ensure that the straps raise higher in the middle, therefore you may need to put a little more stone dust underneath, appx 1/2”. If you fail to do this the straps will lift when the pool is filled with water.

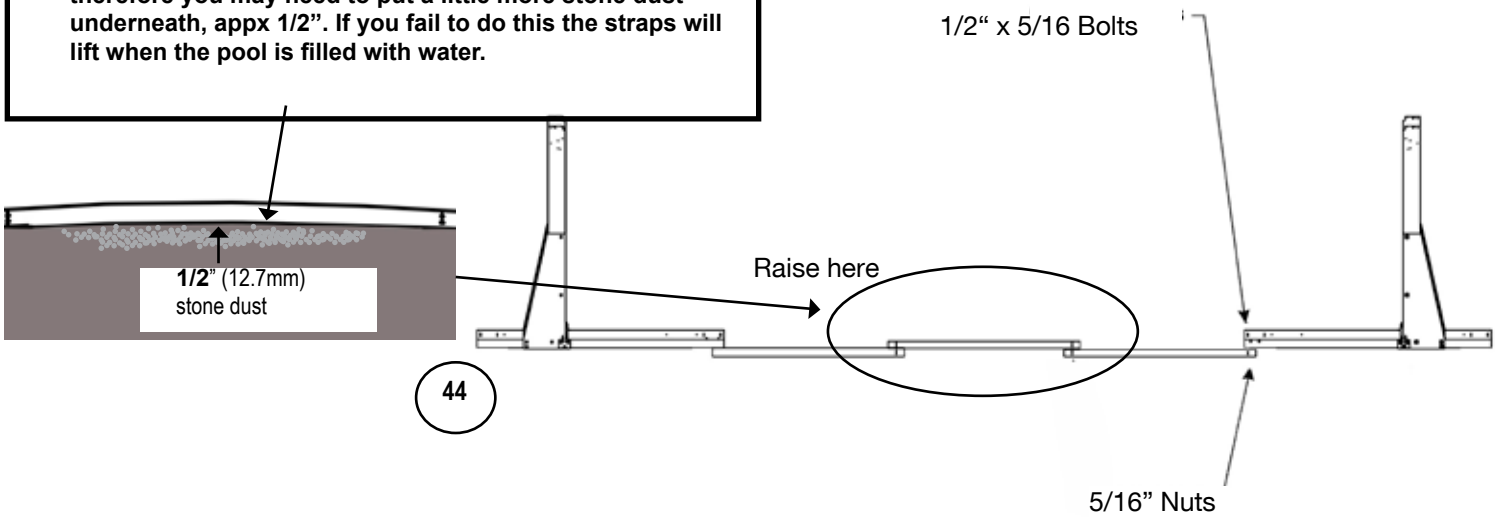

h. Measure the two intersecting axe straight sections are parallel and

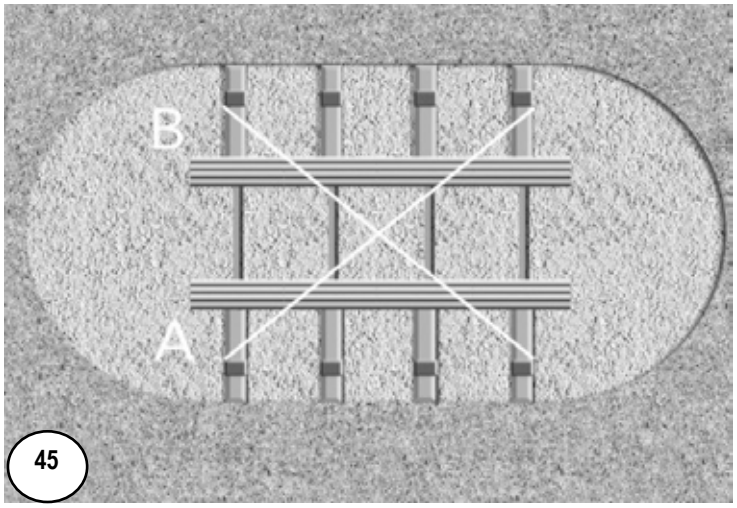

Note:
It may feel tedious to be always measuring, but this only helps to ensure proper installation and avoiding problems further on.

3. Proceed to Section 2 - Assembling the Pool Base

THE FOLLOWING SECTION CONTAINS YOUR POOL'S FOOTPRINT

Section 1

GENERAL INSTRUCTIONS - OVAL POOLS
GROUND PREPARATION

OVAL FOOTPRINT - 15 x 26

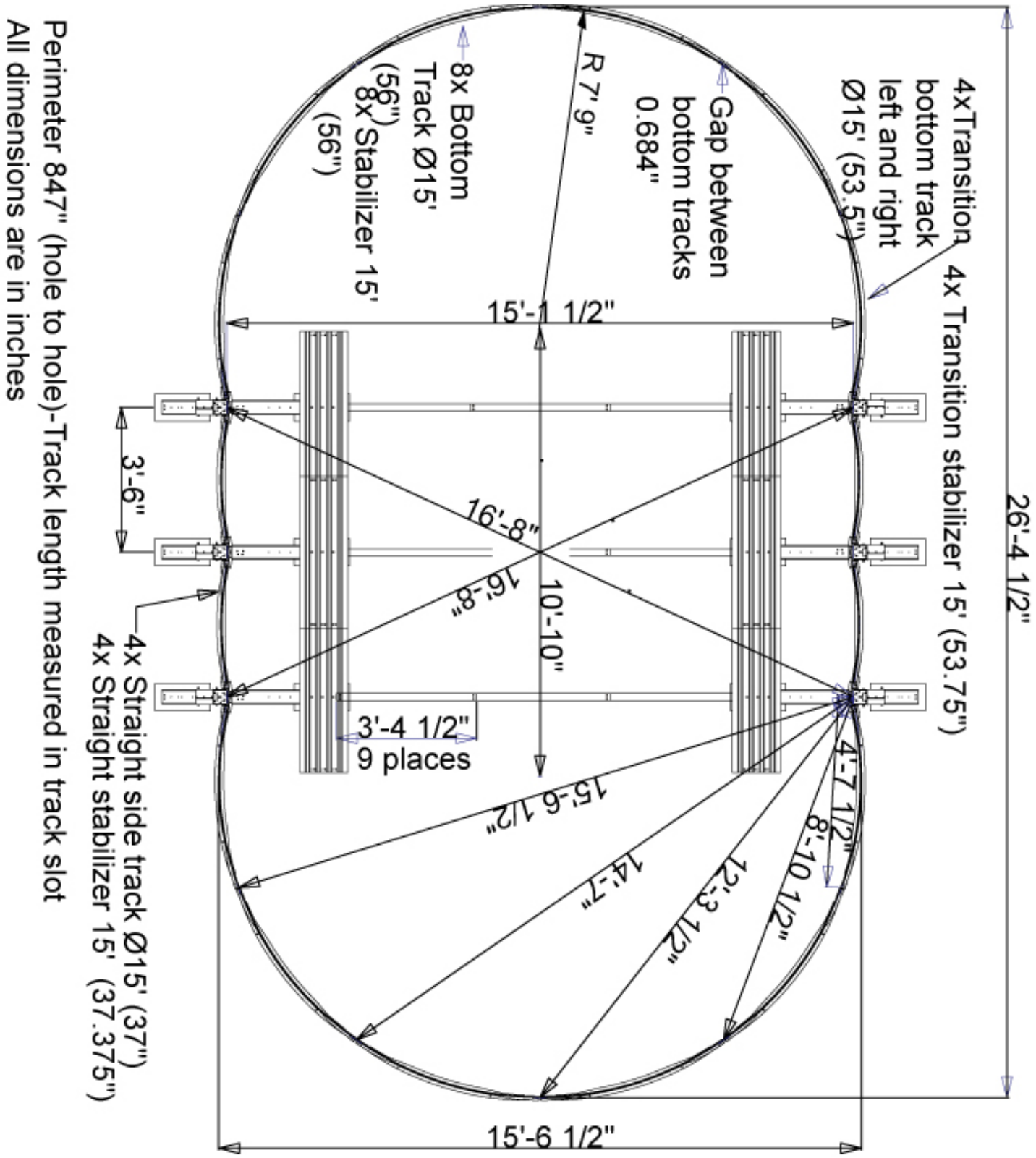

Manufacturer's tolerances and field condition may result in dimensional variations.

Section 1

GENERAL INSTRUCTIONS - OVAL POOLS
GROUND PREPARATION

OVAL FOOTPRINT - 15 X 30

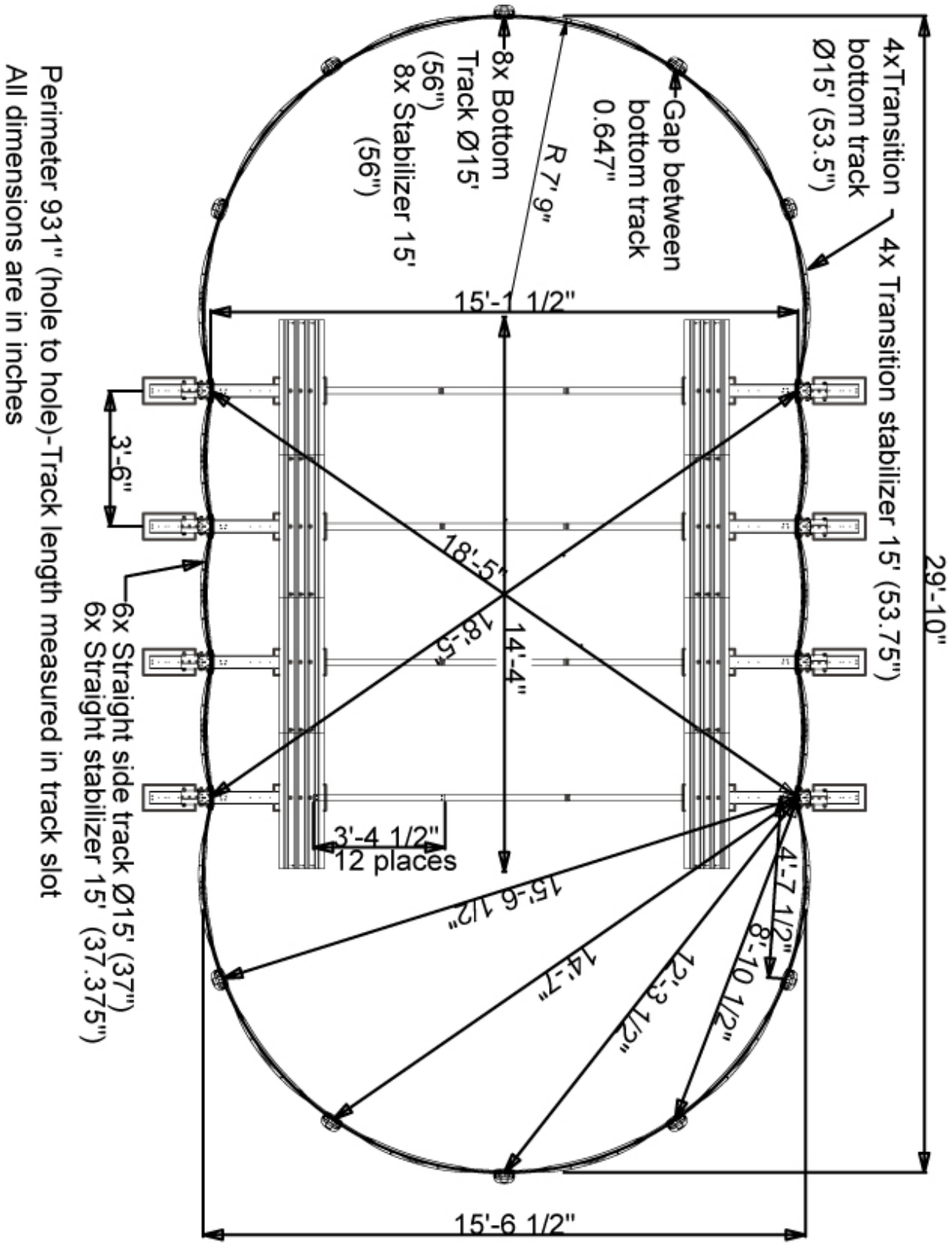

Manufacturer's tolerances and field condition may result in dimensional variations.

Section 1

GENERAL INSTRUCTIONS - OVAL POOLS
GROUND PREPARATION

OVAL FOOTPRINT - 18 X 33

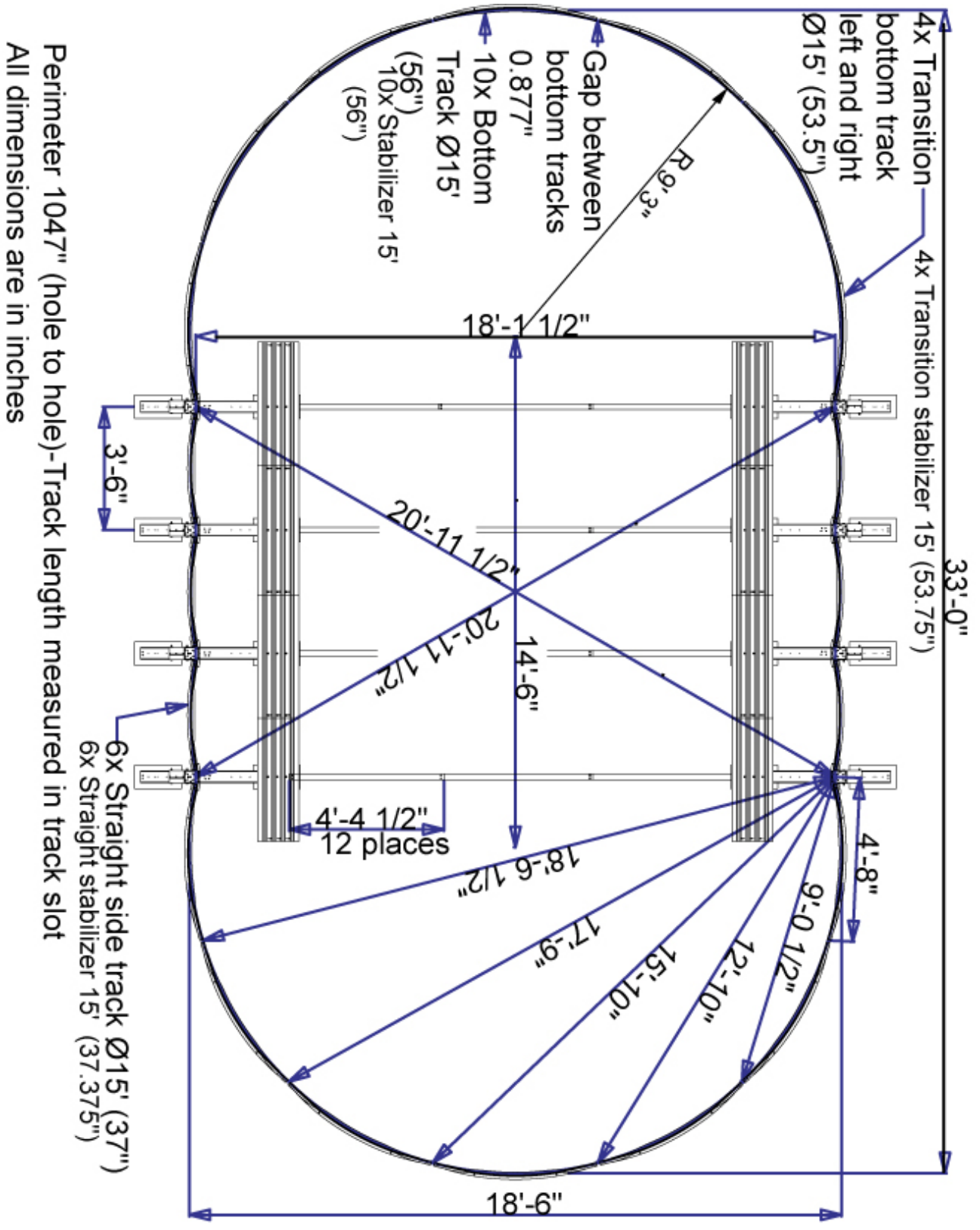

Manufacturer's tolerances and field condition may result in dimensional variations.

Section 2

GENERAL INSTRUCTIONS - OVAL POOLS
ASSEMBLING THE POOL BASE

A. INSTALLATION OF BOTTOM PLATES AND BOTTOM RAILS

1. Bottom rails - Straight section

⚠ Important Note:

PLEASE SEE NOTE ON NEXT PAGE IN REGARDS TO THE DIFFERENT LENGTHS OF BOTTOM RAILS.

a. Remove dust and dirt between the bottom plate and the strap end channel.

b. Install the straight bottom rail between the steel structures. The bottom rail has to fit inside the bottom plate, remove any dirt or small rocks during installation. ***(Images 1 & 2)***

c. Install the transition (corner) rail between the straight and the round sections of the pool.

1

2

2. Bottom plates and rails - Round section

a. Continue the installation of the bottom plates of the round sections. Insert the end of each bottom rail into the bottom plate. Leave a gap between the ends of the bottom rails. ***(Images 3 & 4)***

See Diagrams:
Please refer to your pool's footprint (Section 1, last pages) for gap measurement.

3

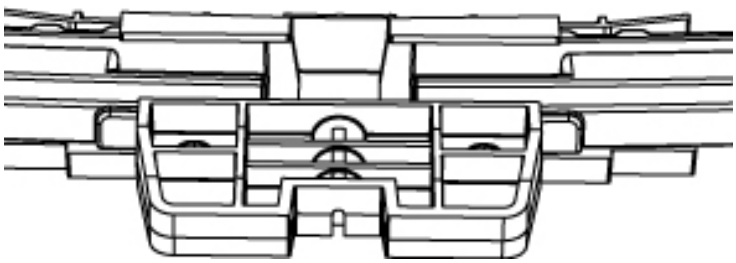
4

GENERAL INSTRUCTIONS - OVAL POOLS
ASSEMBLING THE POOL BASE

IMPORTANT NOTE

There are three types of bottom rails;

1- Straight Section

2- Round Section

3- Transition (End of the Straight Section).

To differentiate which bottom rail is which;

- **The Straight Section will measure the shortest in length**
- **The Transition Section will measure longer than the straight section, but shorter than the round section.**
- **The Round Section will be the longest measurement.**

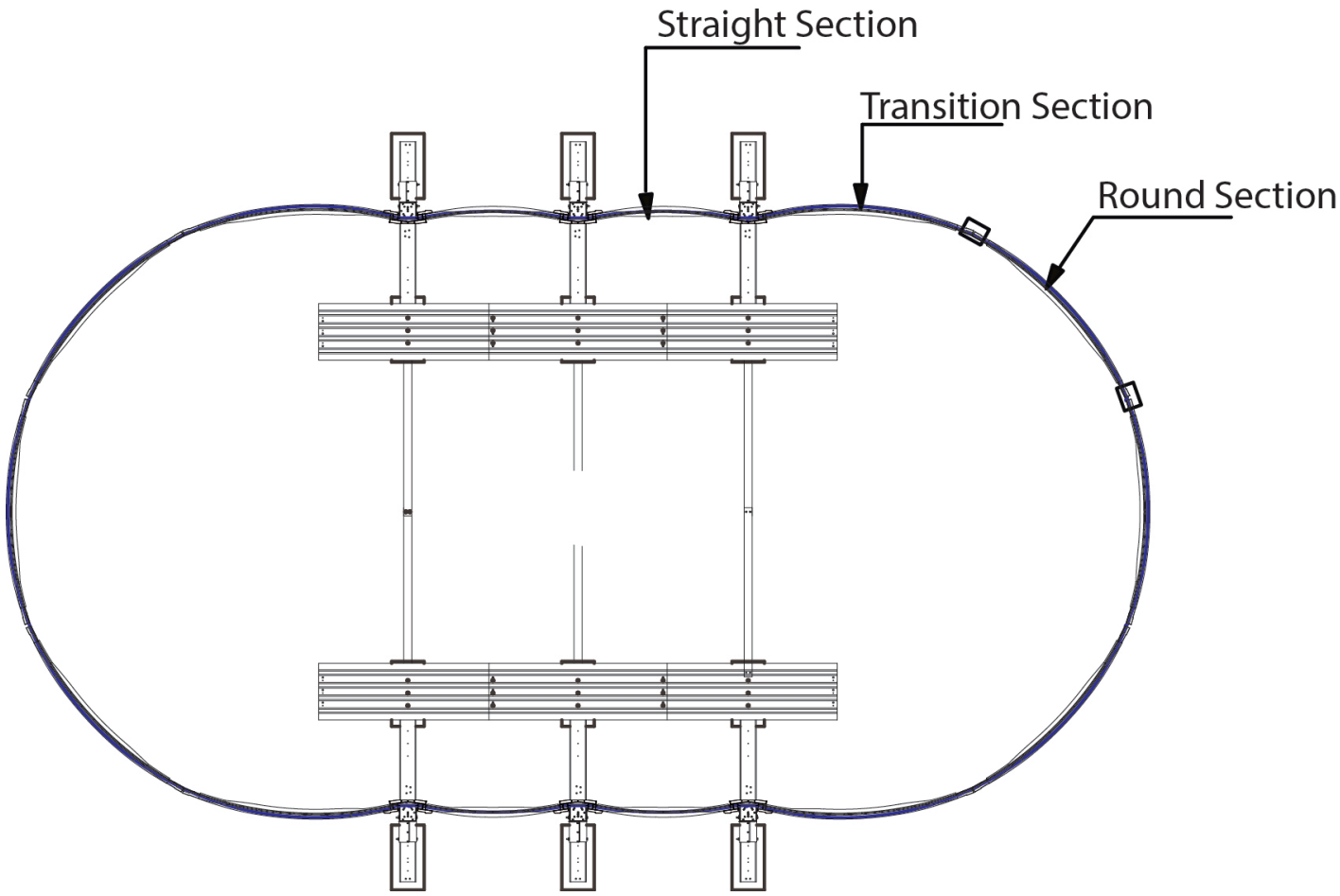

Section 2

GENERAL INSTRUCTIONS - OVAL POOLS
ASSEMBLING THE POOL BASE

A. CONT. INSTALLATION OF BOTTOM PLATES AND BOTTOM RAILS

3. Patio Stones (Recommended)
For Round Section

a. Concrete patio stones may be placed at the base of each upright of your pool. ***(Image 4)***

b. Each bottom plate will show the location for a patio stone. Make a mark in the ground at each base plate.

c. Remove the bottom rails and bottom plates and lay out the patio stones around the circle where the bottom plates were.

d. The patio stones must be sunk into the ground so the tops are flush with the soil around them. **Use the carpenter's level to make sure the patio stones are perfectly level and flush with the ground.** Use either the carpenter's level and a 2-by-4 (5cm x 10cm) wood plank, or the optical level between patio stones to make sure the stones are level with each other. ***(Image 5)***

e. Do not install blocks or rails on loose sifted soil or sand. There must be no space between the ground and the bottom of the rails. All patio blocks must be flush with the ground, solid and level with each other in all directions.

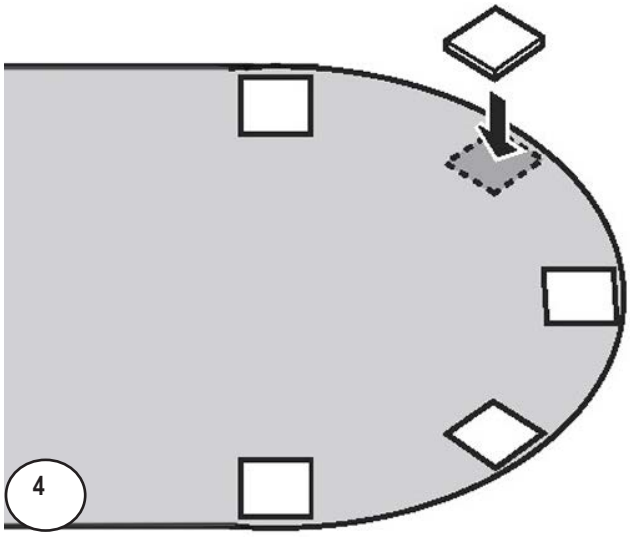

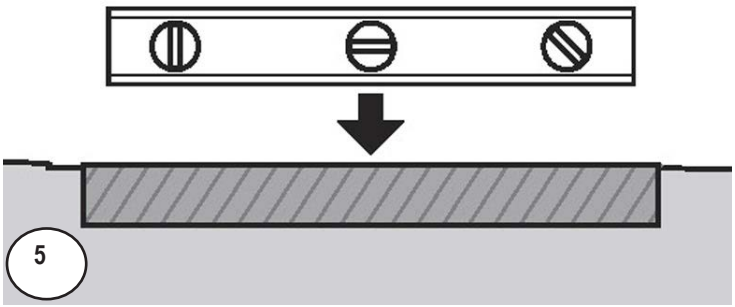

NOTE: Installing patio blocks is recommended and the blocks may shift due to temperature changes.

⚠ Important Note:
Make sure the patio stones are perfectly level and flush with the ground. All patio blocks must be flush with the ground, solid and level with each other in all directions.

Section 2

GENERAL INSTRUCTIONS - OVAL POOLS
ASSEMBLING THE POOL BASE

A. CONT. INSTALLATION OF OF BOTTOM PLATES AND BOTTOM RAILS

4. Measure the perimeter of your pool

a. Measure the perimeter of your pool and hammer nails into the ground to keep the bottom rails into place. These nails are to be removed only at the last step-when filling up the pool. ***(Image 6)***

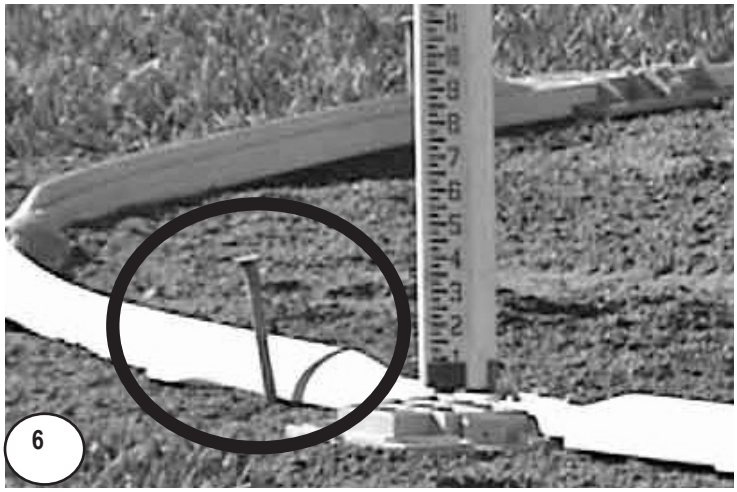
6

⚠ Important Note:
Use a soft measuring tape to meaure around the perimeter of the pool. Measure from the inside of the bottom rail, the measurement should equal the wall length.

b. Verify the height of each bottom plate with an optical level. Ensure that they are the same height. ***(Image 7)***

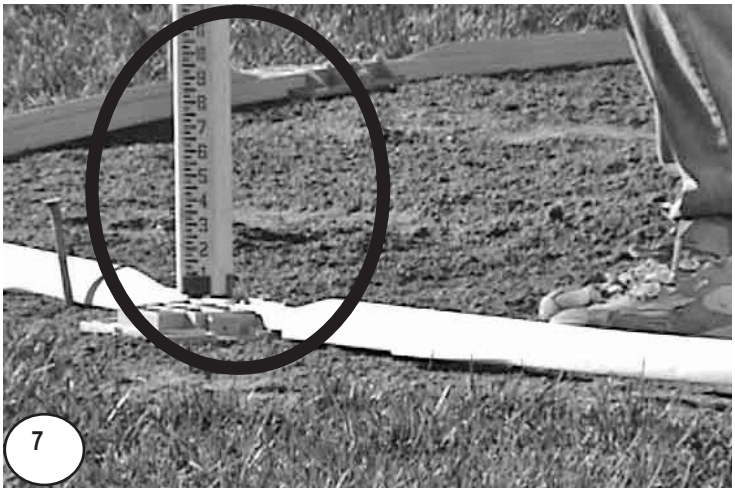
7

5. Fill inside the pool area

a. Pour sifted sand in the centre of your pool. Ensure that you will have enough to build a 3” thick bed of sand across the entire inside of the pool (wall-to-wall) to form your base and a 4” angle of sand on top of the 3” sand base (total sand cove height of 7”) where the base meets the pool wall.
- Foam pool cove can be substituted for the 4” angle of sand placed on top of the 3” sand base. ***(Image 8)***

8

Section 2

GENERAL INSTRUCTIONS - OVAL POOLS
ASSEMBLING THE POOL BASE

B. INSTALL UPRIGHTS FOR STRAIGHT SECTION

1. Installation of uprights - straight section

a. Fix the upright cover over the buttress. ***(Image 9)***

b. Attach the bottom of cover with a 5 1/2" x 1/4" bolt (2PCB520) and 1/4" nut (WI-2F65422). ***(Image 10)***

(You will insert the uprights for the round section after the wall installation).

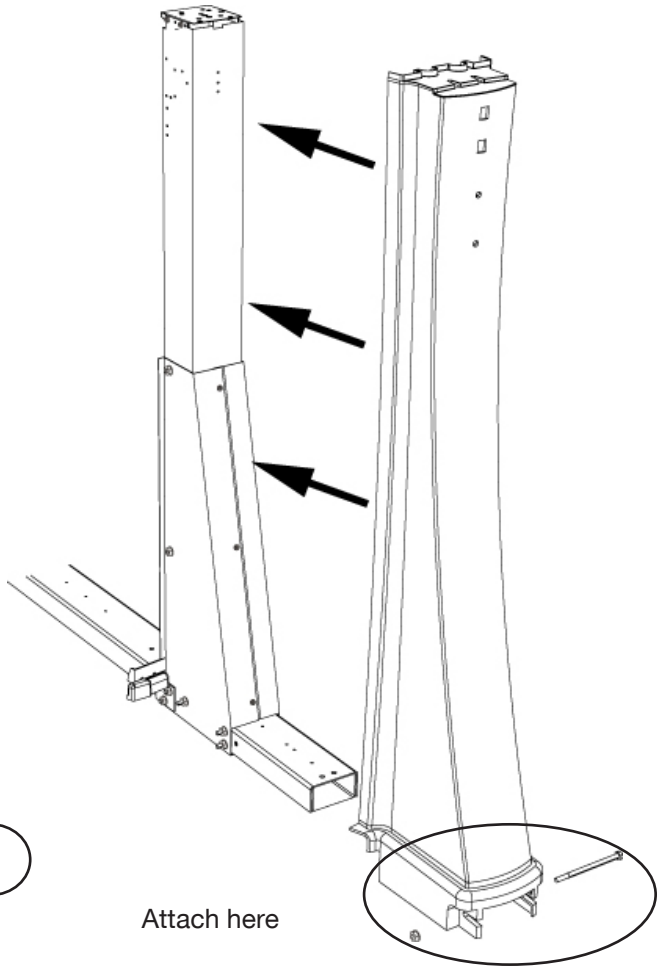

9

2. Proceed to Section 3 - Assembling the Pool Wall

10

Section 3

GENERAL INSTRUCTIONS - OVAL POOLS
ASSEMBLING THE POOL WALL

A. SETTING UP THE POOL WALL

Do not attempt to install the pool wall in the wind, wait for a calm day.
It takes at least 3 people to install the pool wall.

1. Preparing for the wall installation

a. Bring the following items into the middle of the pool foundation before you start uncoiling the pool wall: plywood, some extra sand or fine dirt to make the cove and a ladder to climb out after the wall is assembled.

b. Make sure the skimmer and water return holes are located where you need them to be. The skimmer and water return holes are positioned towards the end of the wall, **(the section before where the wall started).**

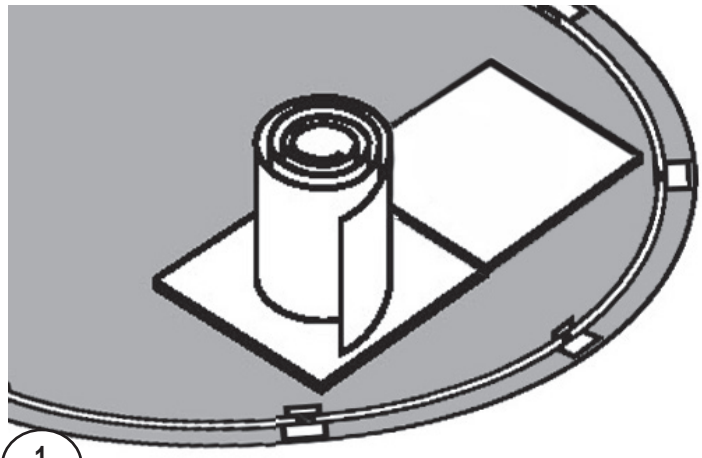

1

Important Note:
Wall edges could have exposed fibres or be sharp, skimmer and water return holes could also be sharp, it is important to wear gloves when installing.

Important Note:
Unlike the steel wall, the resin does not have corrugation. The resin wall is very strong once fully installed, but during installation the wall can be softer and easily damaged depending on the weather. Special care must be taken.

2. Set the pool wall in place

a. Unpackage the pool wall and stand it on the plywood at the place close to where you need to install the skimmer. ***(Image 1)***
(Remember the skimmer and water return holes will be placed at the section just before where you started the wall installation).

b. Start unrolling the wall, guiding the bottom edge into the curved bottom rail. The starting end of the wall must be positioned in the center of a bottom plate, and the skimmer and return holes should be positioned where the pump and filter will be. ***(Image 2)***

2

Important Note:
It is preferable to use very fine sand that is easily compacted. Be careful not to spill sand on the bottom rails.

Section 3

GENERAL INSTRUCTIONS - OVAL POOLS
ASSEMBLING THE POOL WALL

A. SETTING UP THE POOL WALL

c. As you erect the wall, install the stabilizers temporarily to obtain greater stability. You should also use heavy vinyl-covered hooks and rope to hold the wall steady. Ideally, however, you should work with several people. ***(Image 3 & 4)***

d. The resin wall has a protective film to protect the surface. You can remove it while installing the wall or at the end when the wall is fully installed. ***(Image 5)***

e. When uncoiling the wall, the skimmer and return holes are positioned toward the end of the wall.

3

⚠ Important Note:
Wall edges could have exposed fibres or be sharp, it is important to wear gloves when installing.

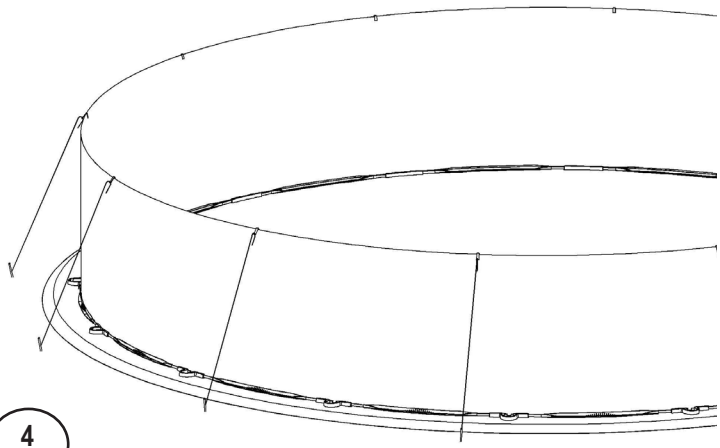

4

⚠ Remember Important Note:
The resin wall is very strong once fully installed, but during installation the wall can be softer and easily damaged depending on the weather. Special care must be taken.

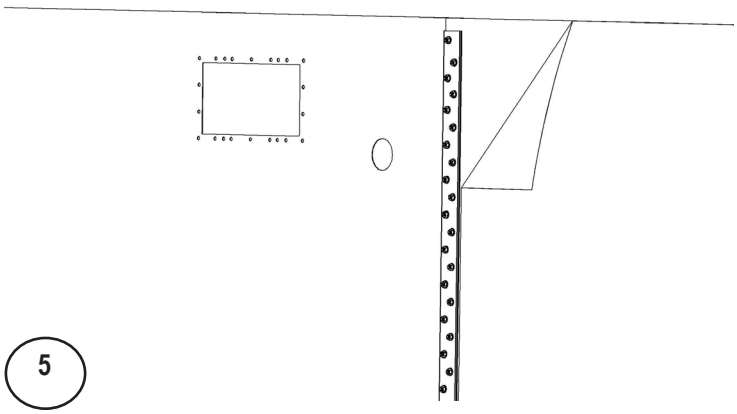

5

⚠ Important Note:
It is preferable to use very fine sand that is easily compacted. Be careful not to spill sand on the bottom rails.

Section 3

GENERAL INSTRUCTIONS - OVAL POOLS
ASSEMBLING THE POOL WALL

A. CONT. SETTING UP THE POOL WALL

3. Join the ends of the pool wall

Your resin wall has a different wall joint than the regular steel wall.
IT IS VERY IMPORTANT TO FOLLOW THESE INSTRUCTIONS:

a. All holes **must** be used. If screws are missing, please contact your customer service and they will send you missing screws. ***(Images 5 & 6)***

b. Each wall end has a extra bonded thickness. Attach wall ends with the two wall bars. Both **must** be used, one on the interior and one for the exterior of the wall. ***(Image 7)***

⚠ Important Note:
Stick a screwdriver through two of the holes to help line up the ends of the wall.

When tightening the screws start from either the top and go down or vice versa. Do not start a few screws from top and a few from the bottom to meet in the middle, this can cause problems later on.

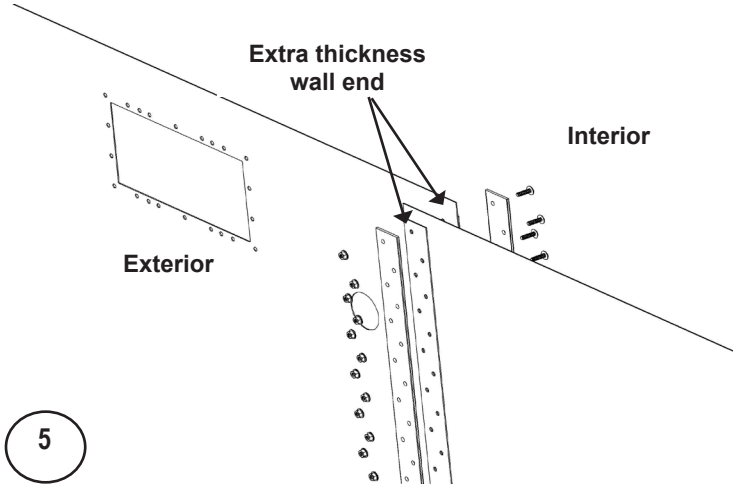

5

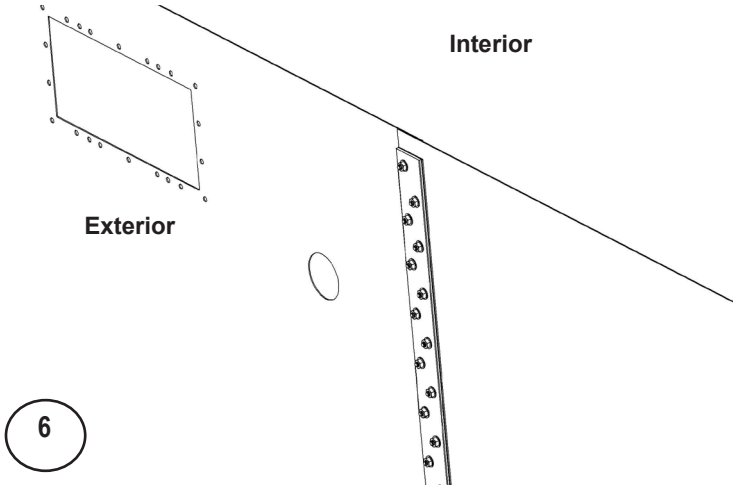

6

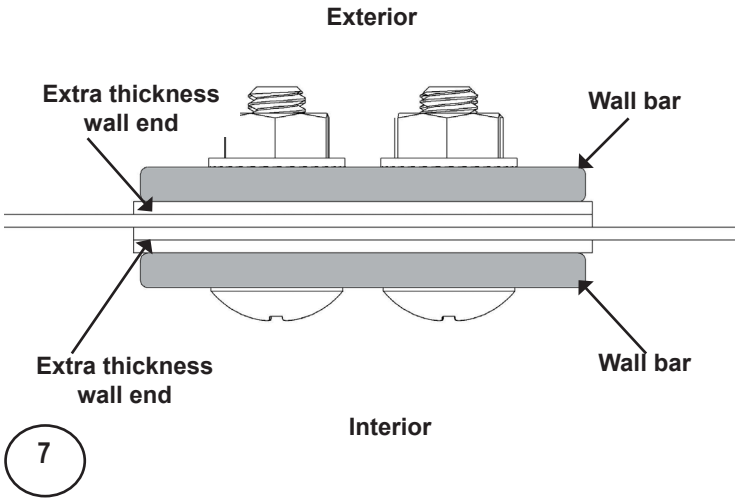

7

Section 3

GENERAL INSTRUCTIONS - OVAL POOLS
ASSEMBLING THE POOL WALL

A. CONT. SETTING UP THE POOL WALL

c. Now that you have installed the wall you can be faced with three scenarios.

1) The wall joints align perfectly, if so, move on to the next step (c).

2) Your wall appears to be too short. **It is not.** However the space between the bottom rails must be decreased by lightly tapping the bottom plates towards the inside of the pool. You can also tap the wall lightly with both hands in the desired direction. ***(Image 8)***

You **MUST** recheck the gaps at each and every one of the bottom rails so that they are all equal in gap size.

3) Your wall appears too long. **It is not.** However the space between the bottom rails must be increased by tapping the bottom plates lightly towards the outside of the pool or by tapping the wall with both hands in the desired direction. ***(Image 9)***

You **MUST** recheck the gaps at each and every one of the bottom rails so that they are all equal in gap size.

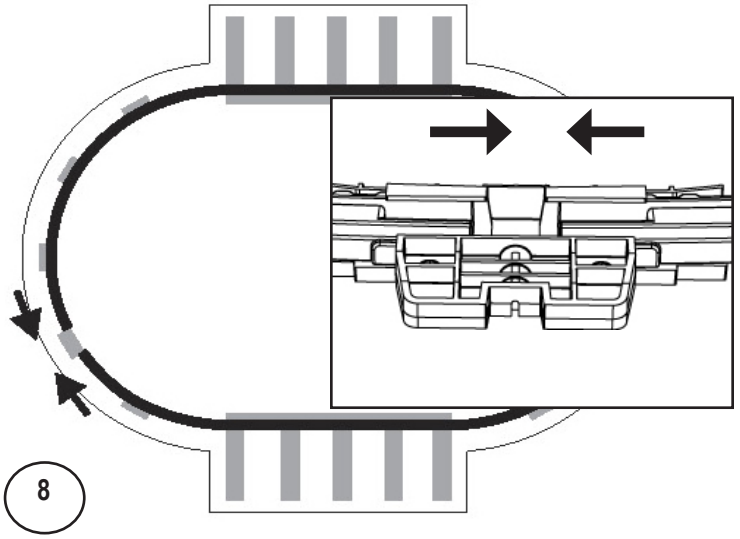

8

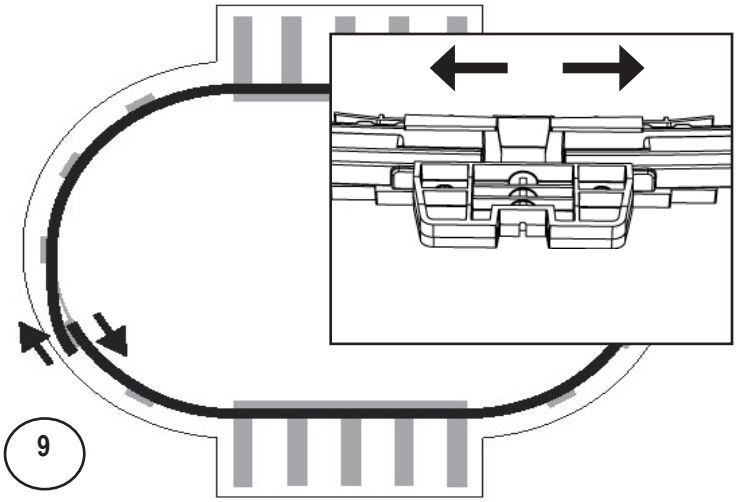

9

⚠ Important Note:
Bottom rails must always be held in place in the bottom plate.

⚠ Important Note:
You MUST recheck the gaps at each and every one of the bottom rails so that they are all equal in gap size.

d. Adjusting the pool to the proper shape may cause the bottom rails and bottom plates to slip out of alignment a little. Recheck all of the bottom plates to make sure each one is centred where the bottom rails meet.

e. Cover the entire joint and bolts with duct tape on the interior of the wall. This will protect the liner from any punctures. ***(Image 10)***

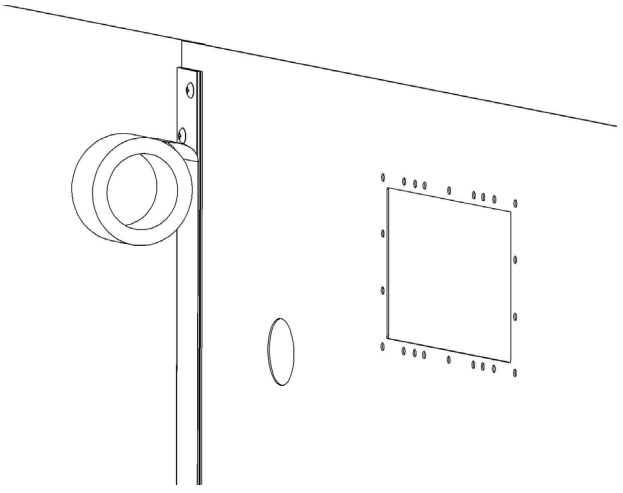

10

Section 3

GENERAL INSTRUCTIONS - OVAL POOLS
ASSEMBLING THE POOL WALL

C. ASSEMBLING THE COVE

1. Make the cove

a. Build a sand cove against the pool wall by creating a 4" angle of sand (on top of the 3" sand base) giving you a total sand cove height of 7 inches where the base meets the resin pool wall. This will prevent the liner from creeping under the wall, and it will also protect the liner from any metal edges of the pool framework. **THIS STEP IS NOT OPTIONAL, IT MUST BE DONE.**

b. Water the sand to compact it and use a trowel to spread it evenly. ***(Image 11)***

Important Note:
The cove is an important part of the pool structure. Take your time to make a complete, full-size cove.

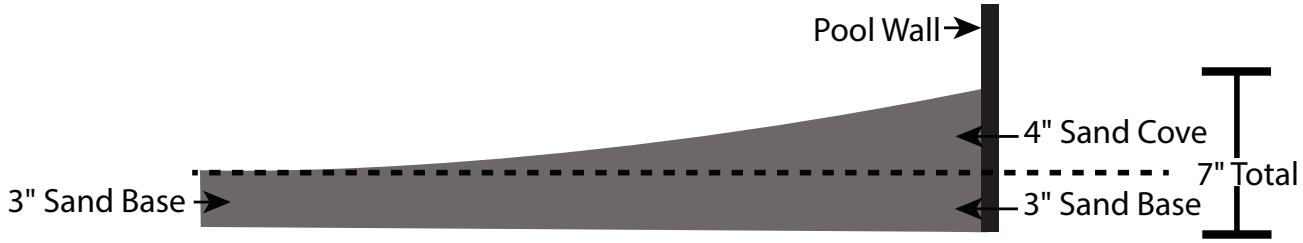

IMPORTANT: If using foam cove, install it on top of the 3" sand base.

c. Proceed to your liner instructions and after liner installation proceed to Section 4-Installing the pool frame.

GENERAL INSTRUCTIONS - OVAL POOLS
ASSEMBLING THE POOL WALL

IMPORTANT INFORMATION

It is EXTREMELY IMPORTANT to follow these instructions when you're installing a base underneath your pool liner. If this is done incorrectly your pool wall will break or become permanently damaged. Failure to follow these instructions will result in pool wall damage that voids the warranty.

Using fine mason sand (free of rocks and debris), lay a 3 inch thick bed of sand across the entire inside of the pool (wall-to-wall) to form your base. Build a sand cove against the pool wall by creating a 4" angle of sand or use foam pool cove (on to of the 3 inch sand base) giving you a total cove height of 7 inches where the base meets the pool wall. It is very important to make sure that the vinyl pool liner is supported by the proper sand base height. There should be NO AIR SPACE between the vinyl pool liner and the base that it's resting on.

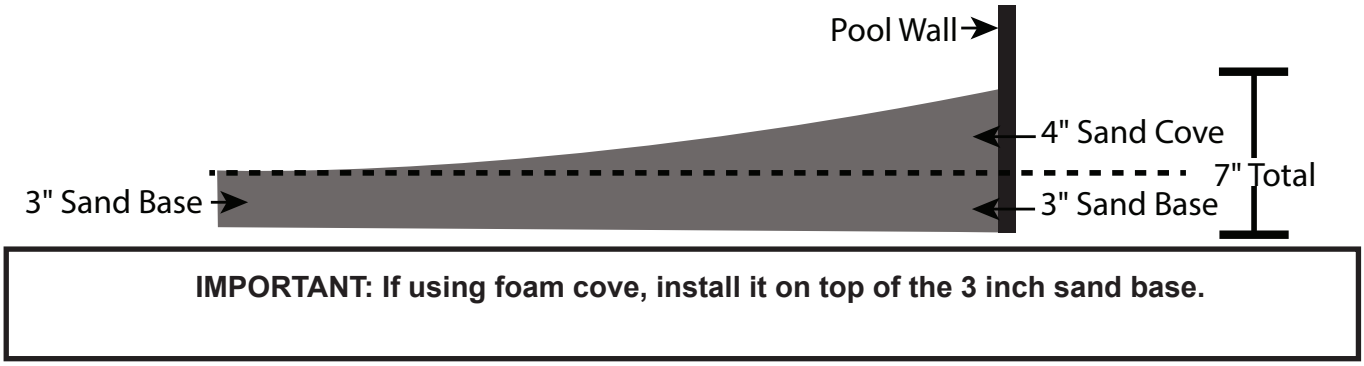

IMPORTANT: If using foam cove, install it on top of the 3 inch sand base.

IMPORTANT INFORMATION ABOUT YOUR LINER

We do not make or supply liners for our pools.

Please contact your liner's manufacturer with questions or if instructions are not included with the liner.

Liner must be installed per the liner manufacturer's instructions.

Incorrect liner installation may void the warranty.

Section 4

GENERAL INSTRUCTIONS - OVAL POOLS
ASSEMBLING THE POOL FRAME

A. INSTALLATION OF THE UPRIGHTS

1. Install the uprights - Round Section

a. The wall joint is hidden behind the upright on most pools. This assures that the skimmer and skimmer return holes are not obstructed.

b. Slide the base of the support post into the front part of the bottom plate. ***(Image 1)***

c. Secure the support post with a screw (2PPS112) in the opening at the base of the post. ***(Image 2)***

Important Note:
Use the ridges in the pool wall to make sure the upright column is straight up and down.

Important Note:
Ensure to leave a gap between the two bottom rails.

See Diagram:
Please refer to your pool's footprint (Section 1, last page) for gap measurement.

Section 4

GENERAL INSTRUCTIONS - OVAL POOLS
ASSEMBLING THE POOL FRAME

B. INSTALLATION OF TOP LEDGES AND LEDGE COVERS

1. Install stabilizers and top plates

a. Install the stabilizer on the wall while ensuring to leave a gap between each end. ***(Image 3)***

b. Align the upright on the wall and insert the upright clips. The upright clips snap onto the top of the upright by applying pressure thus securing the wall and the upright together. ***(Image 4)***

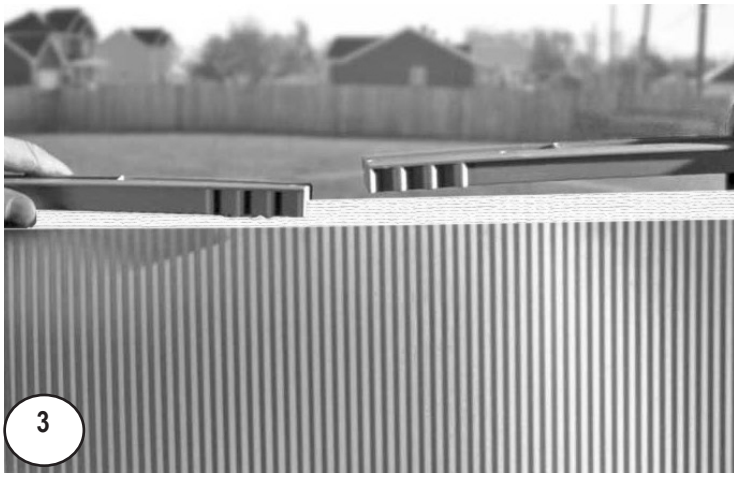

2. Install top ledges

a. Position and place the top ledge on the upright. The top ledge must be pushed toward the inside part of the pool and the openings on the top ledge must align with the holes on the top of the upright. ***(Image 5)***

b. Insert partially the 3/4 inch screws (6 x V12x34) on the top. Distribute evenly the space between the top ledges to center them between the uprights.

c. Make sure to level the two axes of the uprights by pushing slightly inwards before tightening the screws permanently. ***(Image 6)***

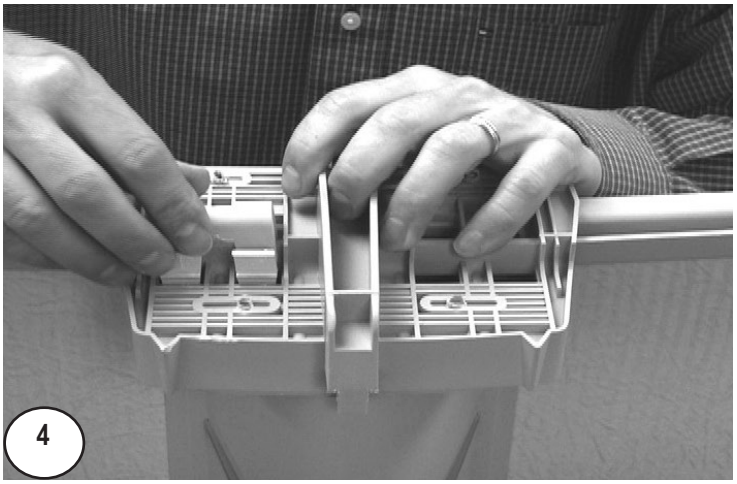

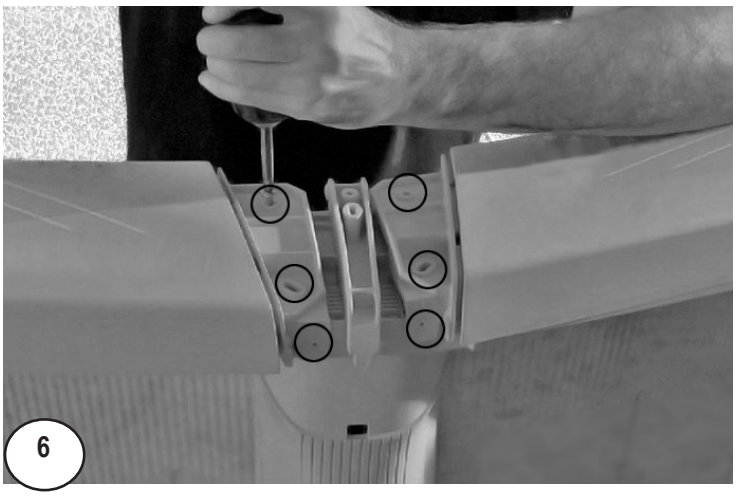

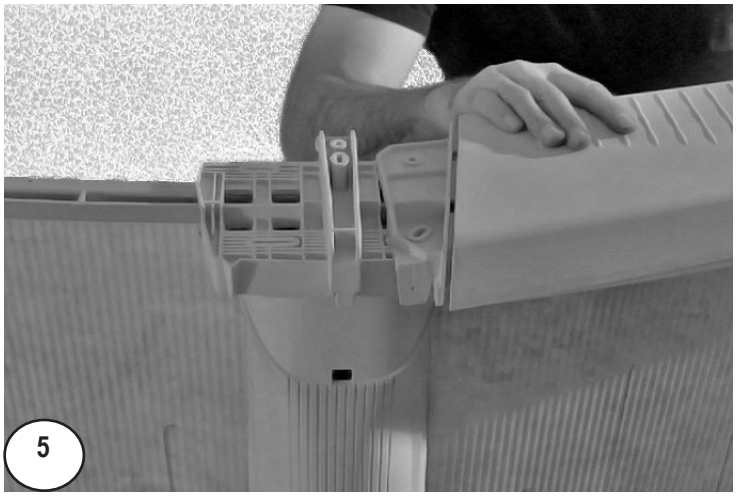

⚠ **Important Note:**
Ensure to leave a gap between the two stabilizers.

See Diagram:
Please refer to your pool's footprint for gap measurement.

Section 4

GENERAL INSTRUCTIONS - OVAL POOLS
ASSEMBLING THE POOL FRAME

B. CONT. INSTALLATION OF TOP LEDGES AND LEDGE COVERS

3. Install top ledges - Straight Section

a. Add resin top plates in straight section and secure with screws (4x 99-0070). ***(Image 7)***

b. Attach top ledge with screws (6 x V12X34). ***(Images 7 & 9)***

NOTE: if your pool is 54 inches in height please add logo in second hole. (Image 8)

Important Note:
We suggest that you install all the top ledges on the wall before attaching them.

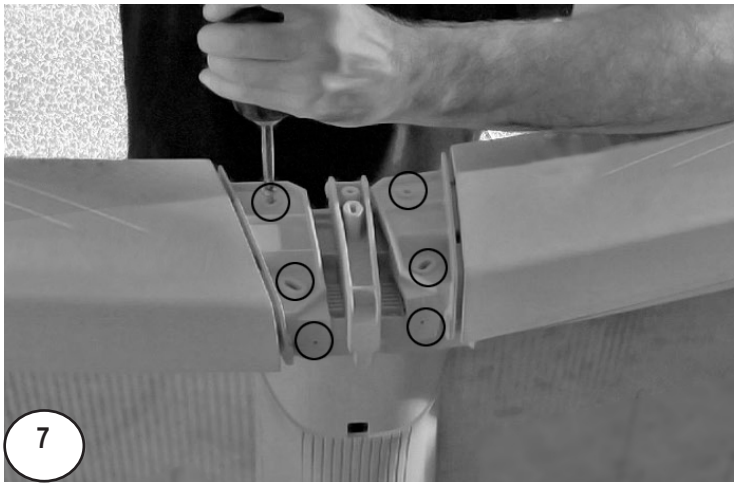

7

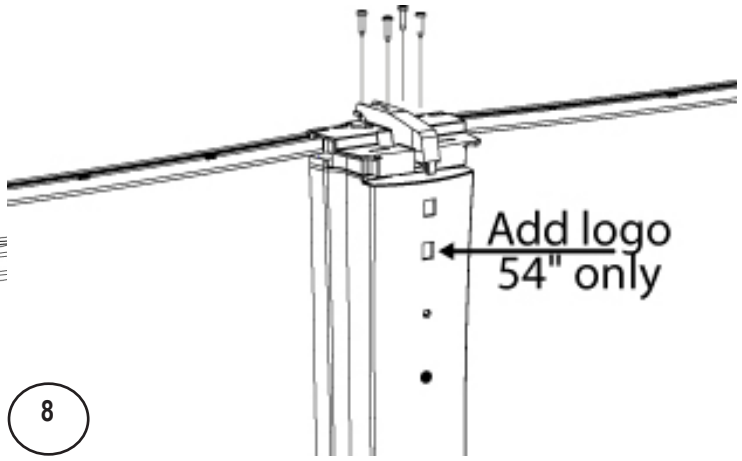

8

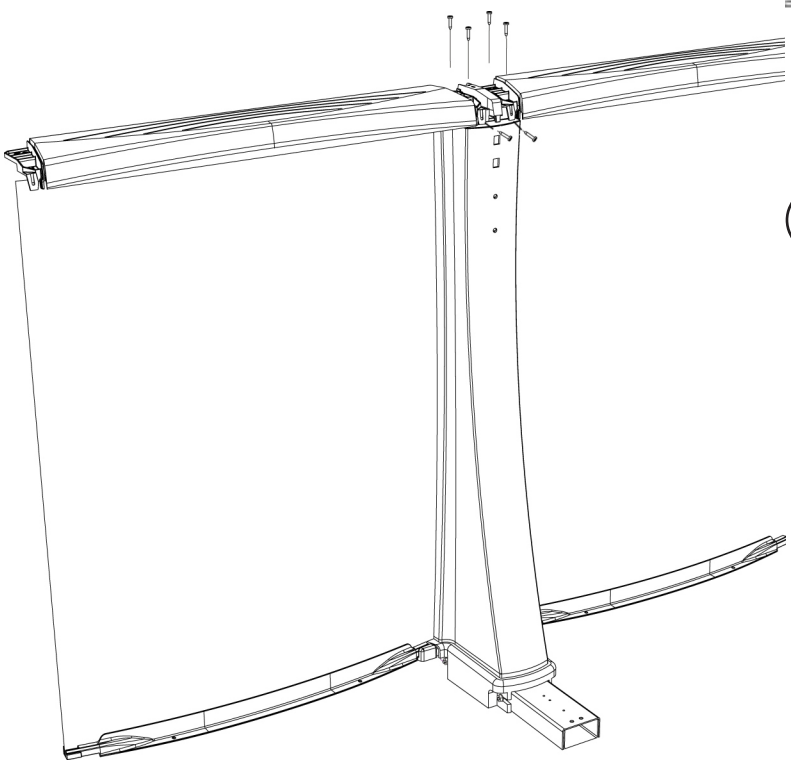

9

Section 4

GENERAL INSTRUCTIONS - OVAL POOLS
ASSEMBLING THE POOL FRAME

C. CONT. INSTALLATION OF TOP LEDGE AND LEDGE COVERS

3. Install inserts on uprights

a. Snap the decorative piece unto the upright.
(Images 10 to 12)

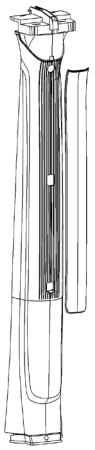

10

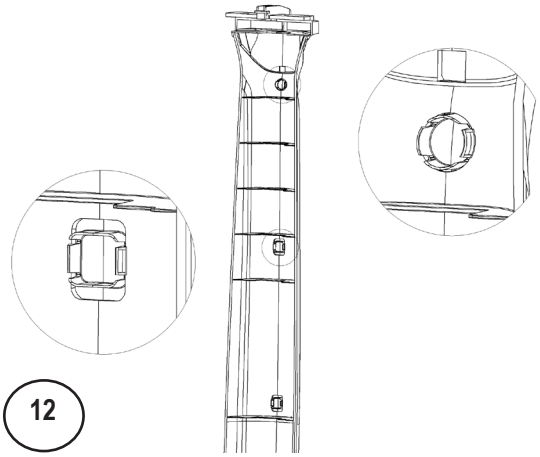

12

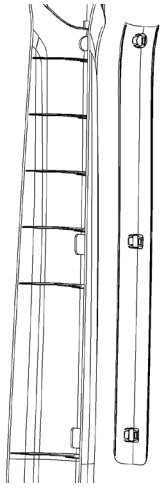

11

4. Install the ledge covers

a. Take the rear part of the ledge cover and insert the hooks underneath the top ledge. ***(Image 13)***

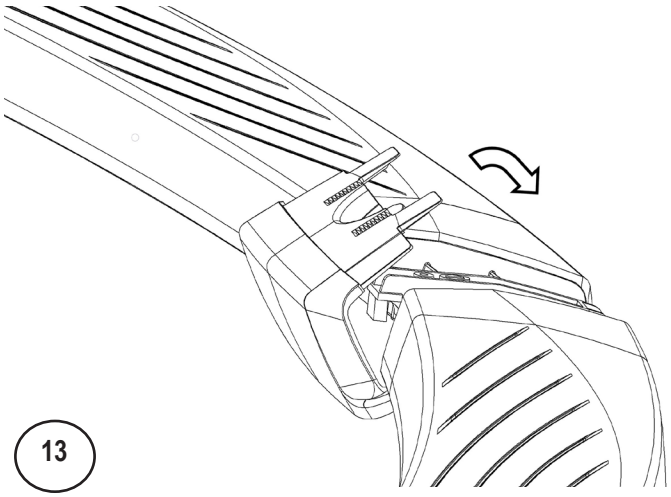

13

GENERAL INSTRUCTIONS - OVAL POOLS
ASSEMBLING THE POOL FRAME

B. CONT. INSTALLATION OF TOP LEDGES AND LEDGE COVERS

b. Secure with a #12 x 3/4 screw ***(Images 14 & 15)***

c. Insert the decorative piece on the front part of ledge cover. ***(Image 16)***

d. Snap the hooks on the ledge cover making sure the aligning tabs are inserted in the cover slots. ***(Images 17 & 18)***

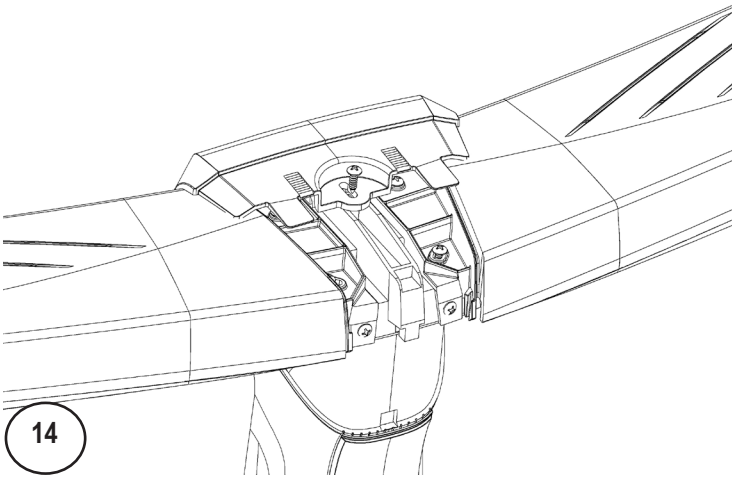

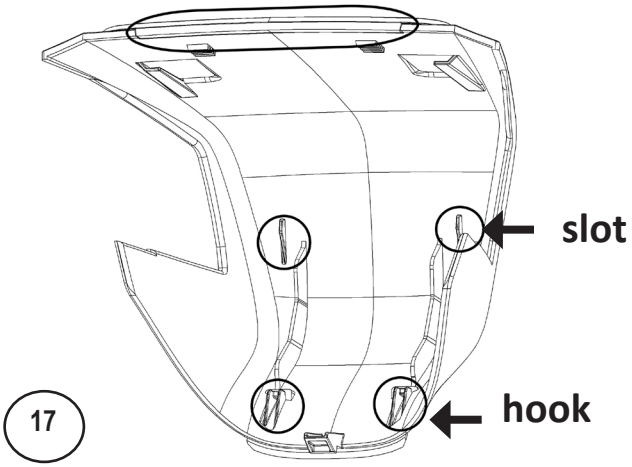

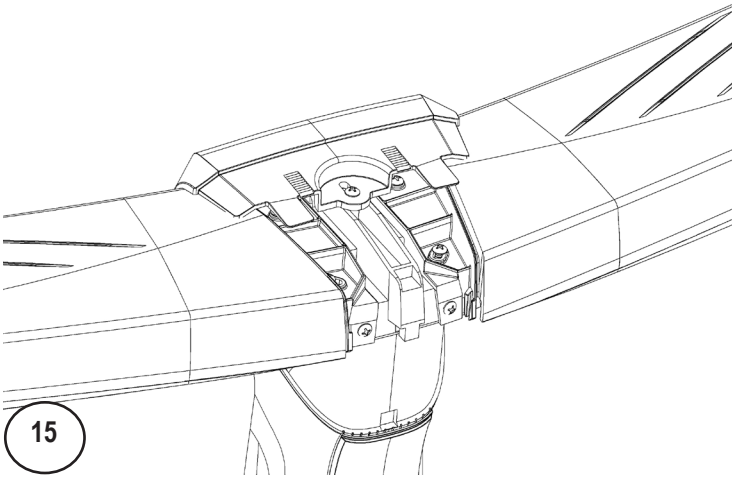

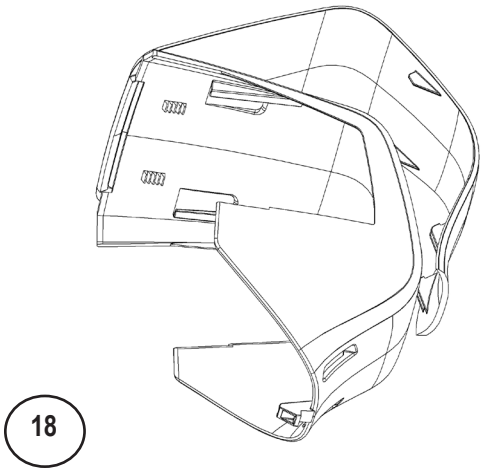

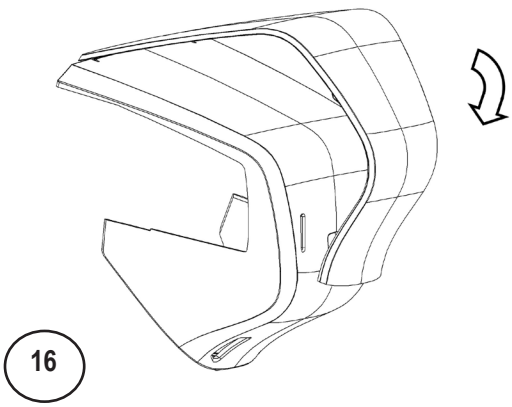

GENERAL INSTRUCTIONS - OVAL POOLS
ASSEMBLING THE POOL FRAME

C. CONT. INSTALLATION OF TOP LEDGE AND LEDGE COVERS

e. Insert front part of the ledge cover (with installed decorative piece) from the front making sure the hook snaps on the upright. Also make sure the sides of the ledge cover are trapped on the upright. ***(Image 19)***

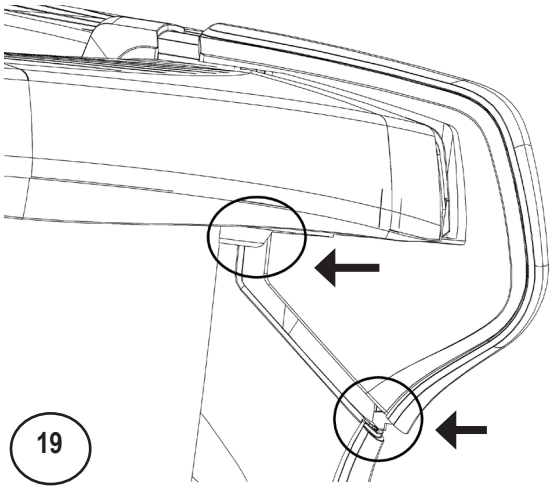

19

f. Make sure the rear part of the ledge cover tab slides properly in the front cover slot. ***(Image 20)***

g. When inserting the front cover, the front cover teeth will grab on the rear cover. ***(Image 21)***

h. Ledge cover installed. ***(Image 22)***

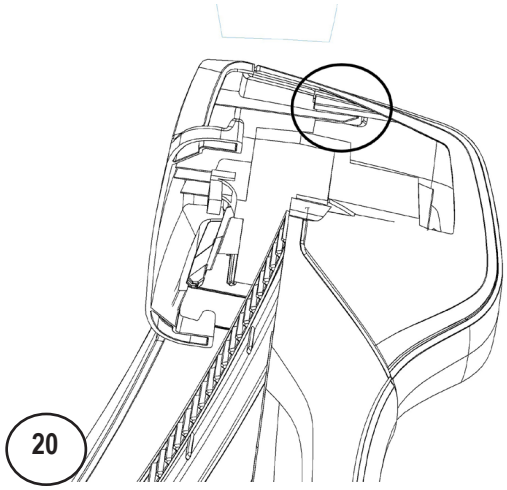

20

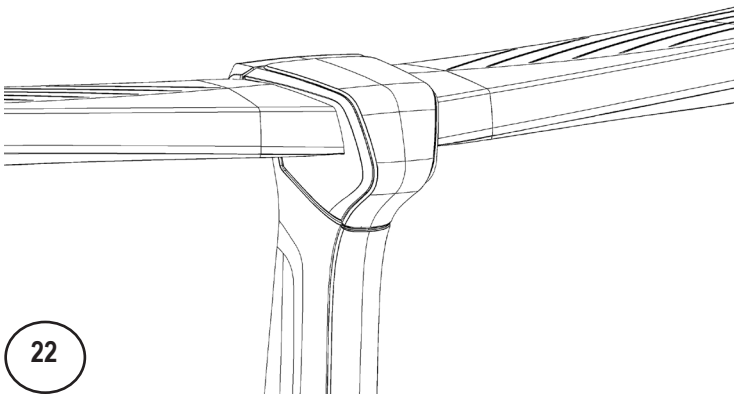

22

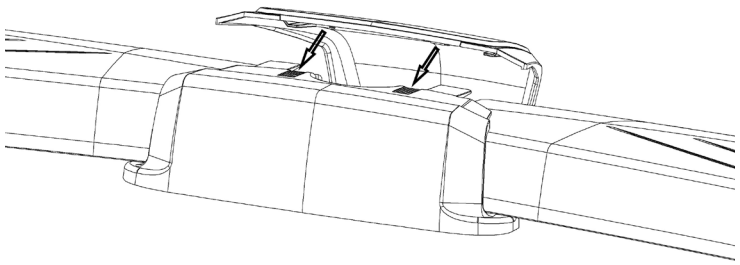

21

Section 4

GENERAL INSTRUCTIONS - OVAL POOLS
ASSEMBLING THE POOL FRAME

D. FILL YOUR POOL WITH WATER

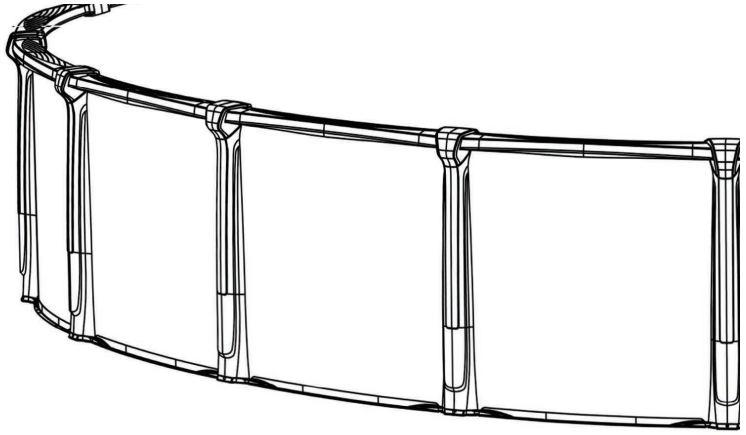

1. Finish filling the pool

a. Fill the pool with water to 2” (5cm) below the lowest opening. Make sure you remove any creases from the liner in the bottom of the pool before the water level gets too high.

b. While the pool is filling, remove the nails that were holding the bottom rails in place.

c. Your pool is now installed. You must now install the filter and pump, the skimmer and water return inlet. Please follow the installation instructions that come with these products.

IMPORTANT:
Make sure that your pool is round, do not assume that by filling up the pool that this will help the pool to place itself into a perfect round circle. Ensure that it is round before filling up the pool with water.

IMPORTANT SAFETY INFORMATION:
Please refer to the safety page at the beginning of this instruction manual. You must follow the rules and information regarding placement of safety stickers on your pool.

GENERAL INSTRUCTIONS - OVAL POOLS
ASSEMBLING THE POOL FRAME

F. BASIC FLOW OF SYSTEM

1. How the system flow should look like

a. When assembled your pool should have a basic flow system as in this image, **PLEASE CONTACT YOUR DEALER** for more specific instructions.

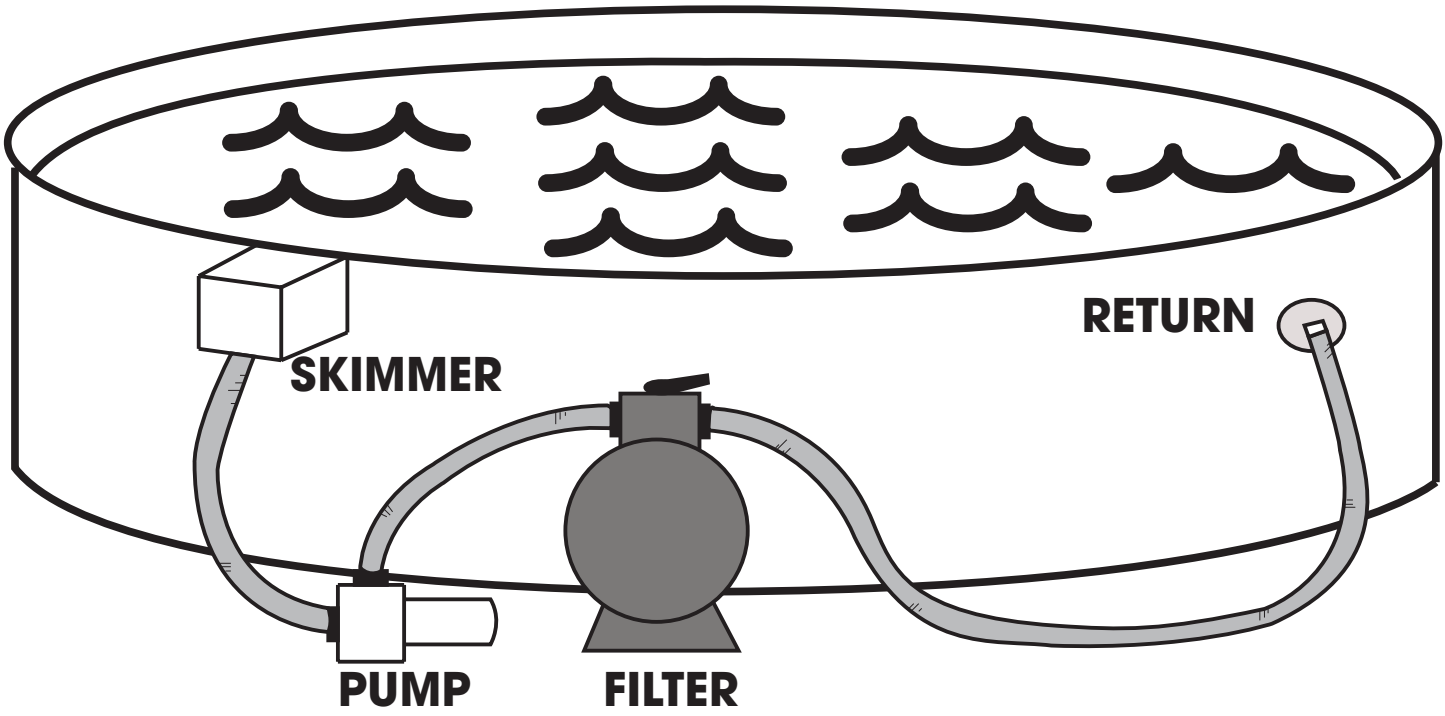

POOL MAINTENANCE

Keep your pool wall and frame clean. Always wash away any deposits of pool chemicals which land on the frame of your pool. Wash periodically with a mild soap solution (no abrasives). At least once a year use a clear non-yellowing household wax on all metal components.

Your pool and liner must be inspected regularly for leaks, corrosion, scratches, and punctures. If any problem is found **IMMEDIATE CORRECTIVE ACTION MUST BE TAKEN**. Small repairs and punctures in your liner may be easily repaired using repair kits available at your local dealer. Scratches on your pool wall & frame must be touched up with anti-rust enamel. Wire brush all rust and add a coat of enamel primer followed by a coat of color matching paint. Pool water is full of various caustic chemicals, which will corrode metal parts. If any corrosion is allowed to continue, failure of the pool structure may occur which could result in excessive property damage as well as bodily harm.

The skimmer & return area and below it are particular areas that must be carefully and regularly inspected. If this area is wet, and remains wet for any length of time, it usually means there is a small leak. Skimmer/skimmer return gaskets must be replaced when they become defective. Water must not be permitted to continually run down the wall, if neglected pool will break. If proper skimmer/skimmer return gasket care is not maintained, your warranty will be void!

Important Note:
Be sure to follow all local and state safety regulations when installing any accessory to your pool. Any decks, and all entries, must be carefully monitored for safety and access to pool. Installing any other manufacturer's deck or slide is strictly forbidden!

Section 5

POOL MAINTENANCE

WINTERIZING YOUR POOL

Along with the cool nights of autumn comes the end of the swimming season. During the winter your pool is subject to more stress than in the summer, and any breakage that is caused by incorrect winter procedures is not subject to any warranty with this company.

All of our pools are designed to be left up all winter, but nonetheless are subject to the warranty that was purchased. Continue to chlorinate and filter until the pool is closed down. If you follow our recommendations, you will be able to winterize your pool properly in a few hours.

Properly winterizing your pool will protect it from damage and make it easier for you to reopen it when spring arrives.

The key to fast and easy winterization lies in regular treatment of the water until the start of the cold season, even if you haven't been using the pool.

Routine maintenance becomes easier and less frequent as the water gets cooler. In order to keep the water clean and clear and to prevent the liner from staining, we recommend closing your pool as late as possible, i.e. toward the end of September when the water temperature is about 10°C (50°F).

Waiting until you have finished closing the pool before shutting off the filtration system will prevent hoses still connected from freezing.

Follow the instructions on the following pages or contact your retailer for further information to ensure that you are protecting your pool properly.

Section 5

POOL MAINTENANCE

CLOSING YOUR ABOVE GROUND POOL FOR THE WINTER

At the end of the season, you must follow these directions to make your pool ready for the winter. For areas where water freezes make sure to follow these instructions before the water is frozen, otherwise do not touch the frozen water, this may damage the pool.

STEP 1) PRIOR TO CLOSING

a. Several days prior to closing your pool, test the water for the ph level, total alkalinity, and chloring. The water balance is important to protect the pool from corrosion or scale build-up during winter shut down.

STEP 2) PERFORM A COMPLETE INSPECTION

FINDING LEAKS

a. Towards the end of the summer season or around mid-August, check for leaks by verifying if the pool's water level is stable. Draw a line on the liner marking the water level and wait 10 days. If after 10 days the level has dropped, then there is a leak. It is important to seal off any leaks you find. Leaks left unsealed when freezing begins can seriously damage your pool and even cause it to collapse.

b. Vacuum carefully to remove all leaves and debris.

CHECK THE LINER

a. Make sure the top of the liner is still attached to the pool wall. make sure there are no leaks. Repair any liner holes with a vinyl patch: any small punctures in the liner can be easily repaired with underwater repair kits available at your local retailer. Do not remove the liner from the pool, as removal of the liner will void the existing warranty.

CHECK ALL JOINTS AND SCREWS

a. Make sure all the frame joints are fitting together properly and make sure the pool wall has not shifted from the bottom rail. Ensure all screws and bolts are tight.

CHECK FOR RUST

a. Periodically inspect the metal parts for any corrosion especially around the skimmer area. If corrosion is found, immediate corrective action must be taken. Wire brush any rust and add a coat of enamel primer followed by a coat of color matching anti-rust enamel paint. Pool structure failure could result in major property damage and bodily harm. Paint any scratches with anti-rust paint.

CLOSING YOUR ABOVE GROUND POOL FOR THE WINTER CONTINUED

STEP 3) ADD CLOSING CHEMICALS

a. To maintain water quality, use a winter kit which contains an algicide and chlorine especially designed for this purpose. When it's time for spring cleaning, this will save you hours of work and reduce the cost of chemicals needed to restore your water quality.

b. If your pool has a bottom drain, you will have to use pool antifreeze to prevent it from freezing during the winter. Unscrew the hose from the base of the skimmer and attach an extension. Pass the extension over the wall of the pool, making sure it remains well attached. Pour antifreeze into the extension. Leave the valve open so that water can drain from the skimmer.

STEP 4) LOWER THE WATER LEVEL

a. Lower the water level so as to leave between 6 to 20 inches (15cm to 50cm) below the water return. You may plug the return jet hole at this time. ****IMPORTANT**DO NOT PLUG THE SKIMMER DRAIN HOLE** (located at the base of the skimmer). Remove all hoses attached to the skimmer and return fittings. Do not let water freeze in the skimmer. Leave the skimmer attached to the pool wall and ensure that the skimmer lid is installed. **DO NOT DRAIN ALL THE WATER OUT OF THE POOL.**

b. Depending on your area and if the freezing point is more aggressive, for example 50% is frozen into ice, we strongly suggest to lowering the water to lowest point. Depending on how great the deep freeze in your area **we suggest you consult with your local dealer about procedures on lowering the water level throughout the winter.** We also suggest throughout the autumn season to continually check this level before freezing season starts, as it must not reach the skimmer holes at any time during the winter. Remove any snow which may accumulate on the top ledge.

STEP 5) FILTER PREPARATION

a. Disconnect the hoses from the filter. Remove and store the filter, ladder and all other removable parts from around the pool. The filter should be clear of any foreign objects and water should be removed from the filter and pump. See the manufacturer's instructions. Store the pump in a temperature controlled environment (so that it is not damaged by changes in temperature).

STEP 6) WINTER COVER

a. For the winter cover we suggest to lower the water level to 1 inch (2.5cm) below the water return. In some areas your dealer may ask you to install it differently in order to protect the pool and the cover. Contact your local dealer to verify the correct procedure for your pool.

b. If using a winter cover, make sure to place a ball underneath so that rainwater falls into the pool. An accumulation of too much water on the cover could place pressure on the pool, causing damage and invalidating the guarantee. Depending on how great the deep freeze in your area we suggest you consult with your local dealer about procedures on leaving the pool cover throughout the winter.

CLOSING YOUR ABOVE GROUND POOL FOR THE WINTER CONTINUED

IMPORTANT

Never let more than 30 cm (1') of snow accumulate on the pool wall; the wall is designed to support the lateral pressure of the pool water, not vertical pressure. With spring thaw, if water leaks from the skimmer or return outlet opening, place a tube at the opening so that the water will run off as far away from the basin of the pool as possible. PLEASE NOTE: Do not strike or hit a frozen pool. This would damage it. Do not disturb the pool till spring. If you have left the winter cover on the pool, make sure to remove accumulated snow after heavy snowfalls.

Important Note:

Whatever the type of valve or extension hose used, you must follow the technique described in this document to close your pool, otherwise your guarantee may be cancelled. Make sure to use antifreeze designed for pools.

Important Note:

An unsealed leak may comprise or cancel the guarantee on your pool.

Never leave water in any of the filtration system components due to the risk of damage during freezing.

POOL MAINTENANCE

PREPARING YOUR POOL IN THE SPRING

At the end of winter, allow the ice in the pool to thaw completely. When the temperature reaches approximately 10 °C (50 °F), you have to restart your filtration system, since algae and bacterial form more quickly as it gets warmer. Here is how to prepare your pool in a few simple easy steps.

a. If your pool is equipped with a pool cover, remove the cover and cushion. Carefully remove with a hose any rainwater that has accumulated on the cover so it does not fall into your pool. Clean your cover and cushion and let them dry. Store them in a dry clean place.

b. Attach the return inlet and skimmer to the filter. Bring the water level up to the middle of the skimmer. Get your filter working. Clean the bottom of the pool with the vacuum, taking care to place the filter in the “waste/drain” position. In this way you will eliminate particles of dirt without disturbing the sand in the filter, and will considerably reduce the need for “backwash rinsing” of the filter.

c. Now that you have purified the water, you have to test it. It is very important that the pH level of your pool be between 7.6 and 7.8 and the pool’s alkaline content be between 80 ppm and 130 ppm. If you are unable to attain these levels, please contact your retailer who will gladly do these tests for you.

Important Note:
Do not drain your pool to clean the water unless absolutely necessary (the water is recyclable). If you do empty your pool, don’t leave it empty for too long or expose it to direct sunlight, as the liner may shrink.

PREPARING YOUR POOL IN THE SPRING CONTINUED

d. When the pH and alkaline levels are ideal, apply a shock-treatment or chlorinate your water. Let it filter for 24 hours and again verify both the pH and free chlorine levels. NOTE: Add chemical products to your pool after sunset, as sunlight rapidly destroys chlorine.

e. Let it filter for several days until the water is clear and the pH and free chlorine levels have stabilized. Add a conditioner/stabilizer by carefully following the manufacturer's instructions. This will stop the chlorine from evaporating quickly in sunlight. Add the quantity of algicide required to prevent algae.

f. You may now begin regular maintenance of your pool. Don't forget to obtain a new set of solutions for your water analysis kit every spring. The old solutions may give false results.

g. Make sure that the skimmer (screws and adapter) is properly in place and tighten the water return fittings to prevent leakage and premature rusting of the pool wall or the lower part of the bottom rail.

HAVE FUN!

IF YOU FOLLOW THESE TIPS AND ASK YOUR DEALER FOR ANY OTHER ADVICE YOU MAY NEED, YOU WILL HAVE ALL THE INFORMATION NECESSARY TO GET YOUR POOL OPERATING AGAIN.